SC10 4x4

Short Course

#90005 SC10 4X4 Lucas Oil RTR
#90006 SC10 4X4 Pro Comp RTR
#90007 SC10 4X4 Rockstar/Makita RTR
#90010 SC10 4X4 Factory Team Kit

IFMAR WORLD CHAMPIONS 26 TIME ASSOCIATED

1:10 Scale Electric 4WD Off Road Race Truck Manual & Catalog

1/12

TEAM ASSOCIATED

Designed in California, USA

:: Introduction

Thank you for purchasing this Team Associated product. This assembly manual contains instructions and tips for building and maintaining your new SC10 4x4 FT Kit or RTR. Please take a moment to read through this manual to help familiarize yourself with these steps.

Team Associated, the only RC car company with 26 World Championships is proud to present the SC10 4x4!

Starting with a clean sheet of paper, Team Associated's Area 51 design engineers have created the ultimate four-wheel drive short-course racer, the SC10 4x4.
Its composite modular chassis design with sealed receiver box and removable ESC tray, combined with innovative features such as 13mm big bore shocks, a decoupled slipper clutch, and a hybrid belt/gear drive system, make the SC10 4x4 unlike any other short-course truck on the planet. In addition to these unique features, a long list of competition-proven components create an extremely high performance and durable state-of-the-art race truck.
It's not often a new platform is introduced that redefines a class. The engineers of Area 51 seized the opportunity to create the next legendary vehicle. Once you have driven the SC10 4x4 for yourself, we think you will agree - this is the 4x4 short course race truck that you have been waiting for!

We are continually updating and improving our designs; therefore, actual parts may appear slightly different than in the illustrations. New parts will be noted on supplementary sheets located in the appropriate parts bags. If you are building your 4x4, be sure to check each bag for these sheets before you start.

:: FT KIT Features

Features in the SC10 4x4 FT Kit:

- VTS slipper (variable torque, multi-plate slipper with 4 drive surfaces) to improve acceleration
- 13mm hard anodized aluminum big-bore threaded shocks with low friction seals
- Centralized-mass battery mount with carbon fiber strap
- Factory Team Carbon Fiber Chassis Brace Rod
- Factory Team TiN coated shock shafts, and inner hinge pins
- Factory Team blue aluminum wheel hex adapters
- Factory Team front and rear swaybar sets included
- Factory Team blue titanium HD light weight turnbuckle set
- Factory Team light weight differential outdrives
- Factory Team blue aluminum light weight metric screw set
- Improved steering rack with new Ackerman settings
- SC10 Contender short course racing body (clear), with Team Associated decal sheet
- 32 pitch front and rear gearboxes with sealed fluid filled differentials.
- CVAs with captured drive pins and heavy duty 6mm alloy axles.
- Composite modular tub chassis with Low-CG and Low Polar Moment design.
- Ball bearing steering system with adjustable steering stops.
- Designed for maximum durability and performance

:: RTR Features

Features in the SC10 4x4 RTR:

- Unique dual gearbox drive train coupled together with a 5mm HD belt system with external tension adjustment.
- 32 pitch front and rear gearboxes with sealed fluid filled differentials.
- Decoupled center slipper clutch allows for front and rear wheel drive to slip independently, resulting in more traction and stability on bumpy track conditions.
- CVAs with captured drive pins and heavy duty 6mm alloy axles.
- 12mm hex drive KMC replica wheels front and rear with aggressive short course racing tires.
- Painted, decaled, and pre-mounted Championship short course racing body.
- 13mm blue aluminum big-bore threaded shocks with low friction X-ring seals.
- Composite modular tub chassis with Low-CG and Low Polar Moment design.
- Enclosed water-resistant receiver box, and removable ESC tray for easy clean up and maintenance.
- Ball bearing steering system with adjustable steering stops.
- All metric hardware and ball bearings throughout.
- XP3-SS 2.4 GHz Radio system
- Water Resistant XP SC1200 speed control with Deans ® Ultra Plug ®
- S2008MG Metal Gear High-Torque steering servo

:: Required to complete your SC10 4X4 Kit:

- AA-size batteries for transmitter (x8) (#302, 303)
- R/C 2-channel surface frequency radio system (AE #29221)
- Battery pack (6 cell NiMh or 2 cell LiPo)
  (#627 saddle pack, 628, 685, 709, 713, 714, 730-732)
- Battery charger (peak detection charger recommended)
  (#LRP41281, LRP41555) (#604 LiPo/LiFe, #610 NiCd/NiMH)
- Electronic speed control
  (#29144, LRP80955)
- R/C electric motor (550 sized recommended)
  (# 924, 925, 926, 968, 969, 970, 971, LRP50940, LRP50945, LRP50950)
- Steering servo * Some servos may require a wire extension (# 29213)!
  (# 29126, 29166, 29167)
- Pinion gear - (32 pitch or 48 pitch) - depending on motor type
- Tire Glue (#1597) • Paint for body

:: Required to complete your SC10 4X4 RTR:

- AA-size batteries for transmitter (x8) (#302, 303)
- Battery pack (6 cell NiMh or 2 cell LiPo)
  (#628, 682, 683, 684, 685, 709, 724, 725, 730-732)
- Battery charger (peak detection charger recommended)
  (#LRP41281, LRP41555) (#604 LiPo/LiFe, #610 NiCd/NiMH)

:: Other Helpful Items

- Silicone Shock Fluid (Refer to catalog for complete listings)
- Body Scissors (AE Part # 1737)
- FT Hex Wrenches (AE Part # 1541, 1655)
- FT Nut Drivers (AE Part #1561, 1663-1668)
- Reamer / Hole Punch
- Needle Nose Pliers
- Calipers or a Precision Ruler
- FT 4mm Turnbuckle Wrench (#1112)
- Multi Tool (AE Part #7494)
- Green Slime shock lube (AE Part # 1105)
- Hobby Knife
- Wire Cutters
- Soldering Iron

Associated Electrics, Inc.
26021 Commercentre Dr.
Lake Forest, CA 92630

Customer Service
Tel: 949.544.7500
Fax: 949.544.7501

http://www.TeamAssociated.com • http://www.RC10.com • http://twitter.com/Team_Associated • http://bit.ly/AEonFacebook

:: Table of Contents

:: Notes

This symbols indicates a special note or instruction in the manual.

There is a 1:1 hardware foldout page in the back of the manual. To check the size of a part, line up your hardware with the correct drawing until you find the exact size. Each part in the foldout has a number assigned to it for ordering replacement parts.

Associated Electrics, Inc.
26021 Commercentre Dr.
Lake Forest, CA 92630

Customer Service
Tel: 949.544.7500
Fax: 949.544.7501

http://www.TeamAssociated.com • http://www.RC10.com • http://twitter.com/Team_Associated • http://bit.ly/AEonFacebook

:: Servo Install - Bag A

You will need to have your transmitter, receiver, speed control, servo, and a charged battery ready to go for the servo installation and alignment steps!

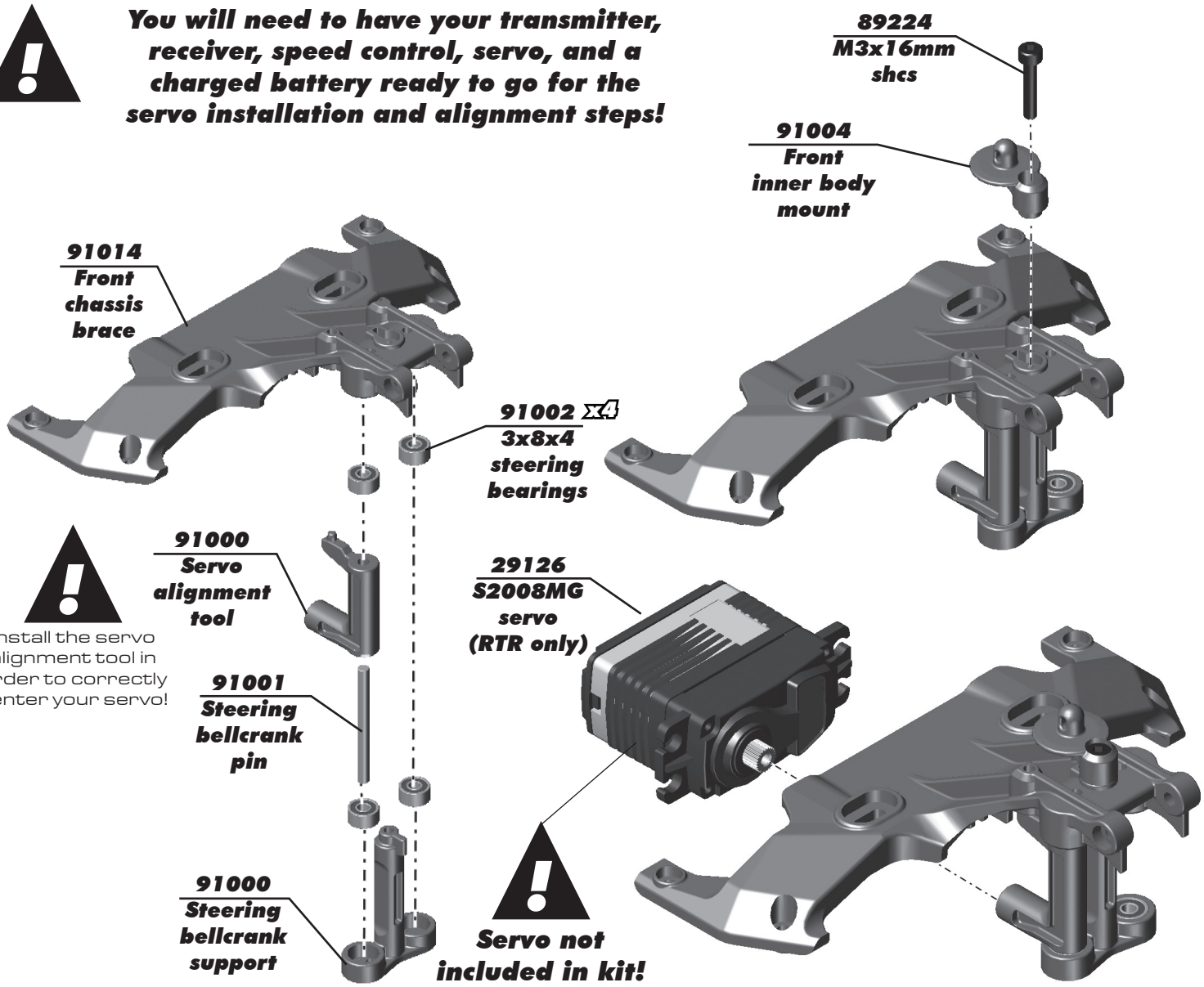

Install the servo alignment tool in order to correctly center your servo!

:: Servo Install (cont.) - Bag A

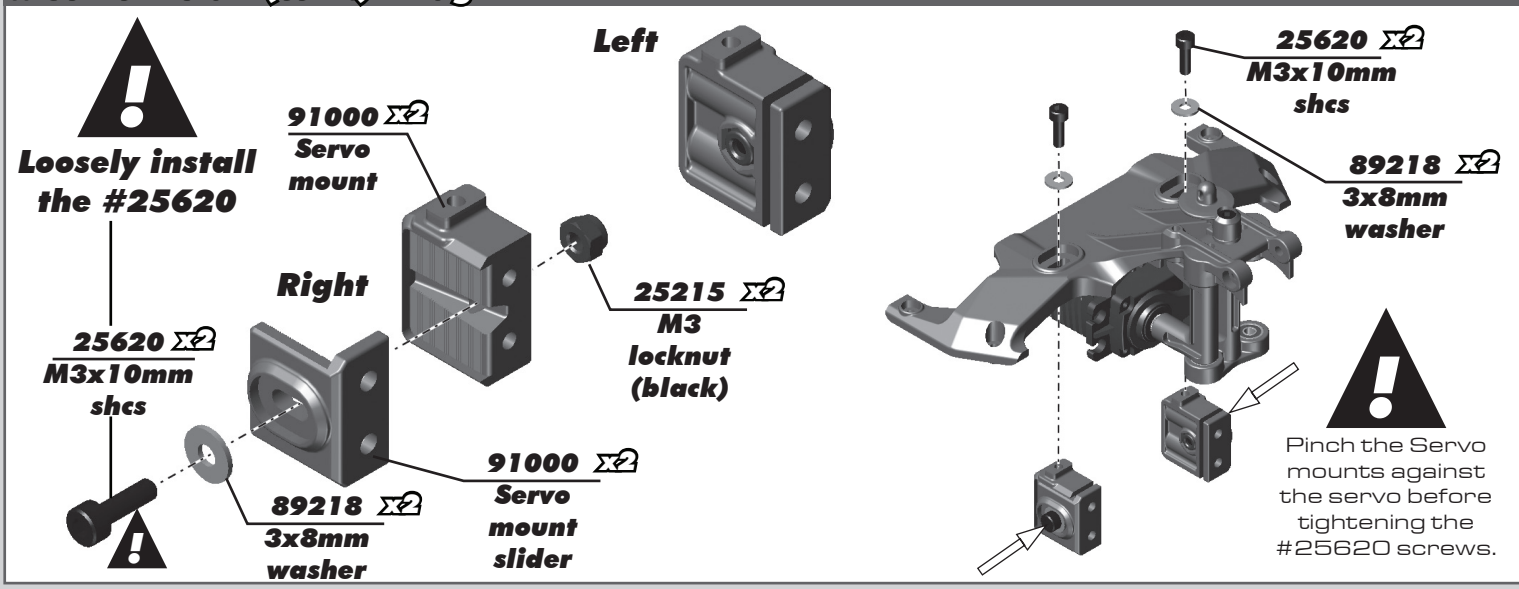

Loosely install the #25620

Pinch the Servo mounts against the servo before tightening the #25620 screws.

:: Servo Install (cont.) - Bag A

1. Push the servo forward into the alignment tool.
2. Adjust the servo sliders forward to bolt the servo into place.
3. Tighten the slider screws from the side.

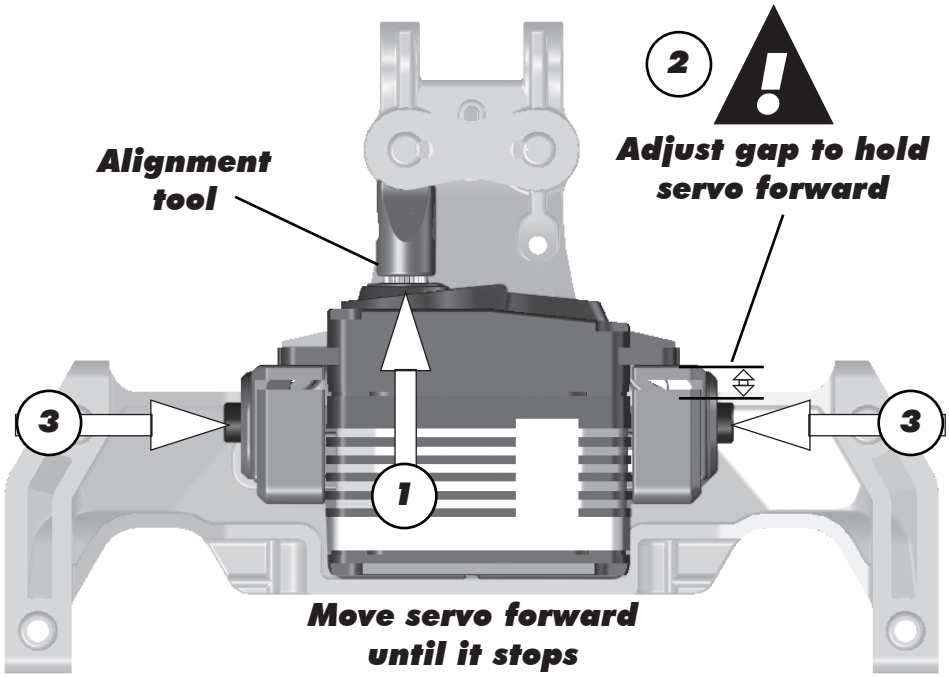

:: Servo Install (cont.) - Bag A

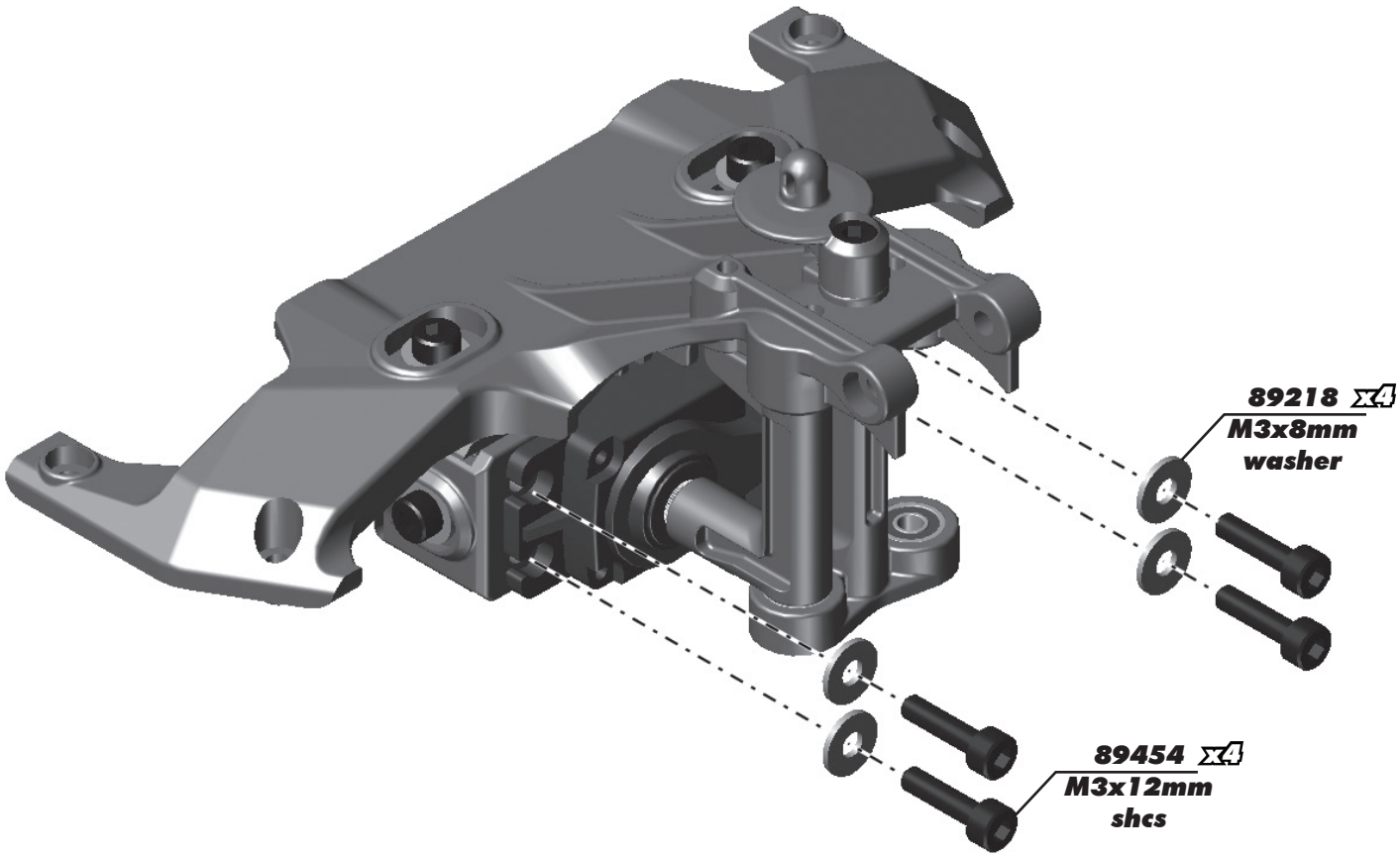

:: Servo Install (cont.) - Bag A

Uninstall the servo alignment tool, front body mount, and the steering bellcrank support! Set parts aside for future installation.

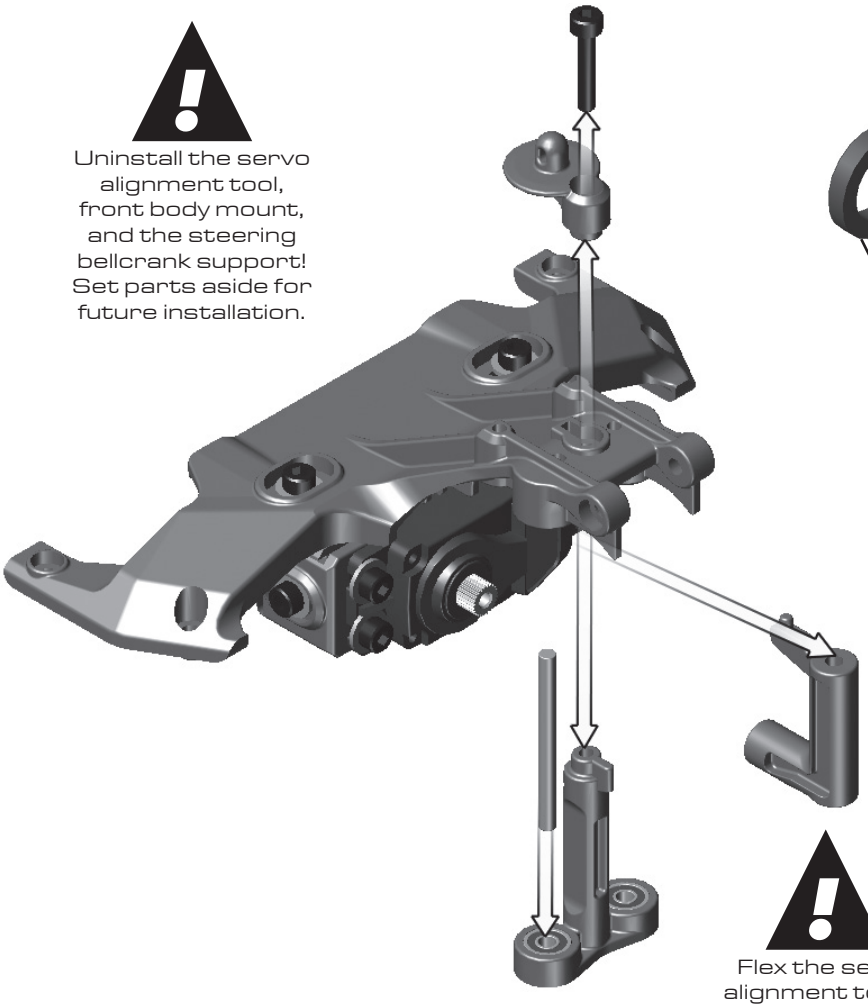

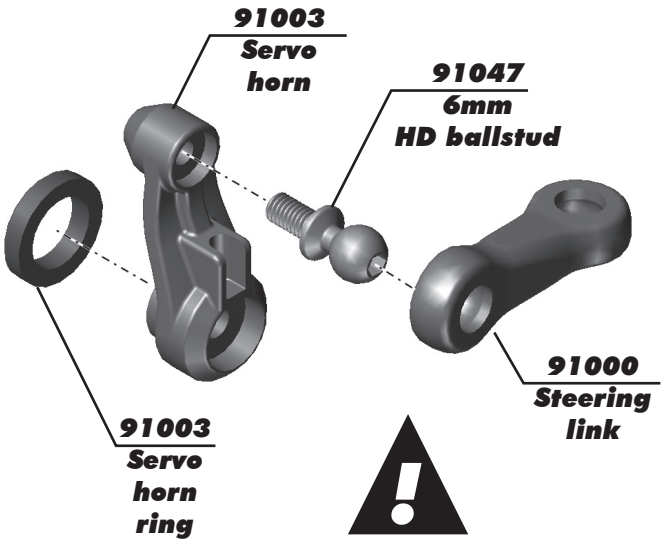

There are multiple servo horns included in your kit. Make sure you install the correct one for your brand servo!

A = JR
Airtronics
Sanwa
F = Futaba, Savox
H = Hitec

Flex the servo alignment tool in order to remove!

:: Servo Install (cont.) - Bag A

Power on your radio and speed control, then center your servo before installing the servo horn!

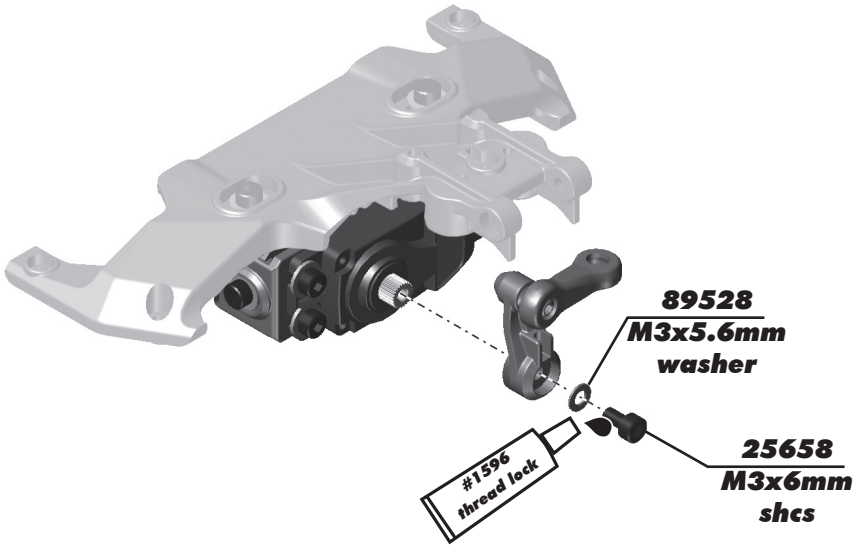

:: Steering Assembly - Bag A

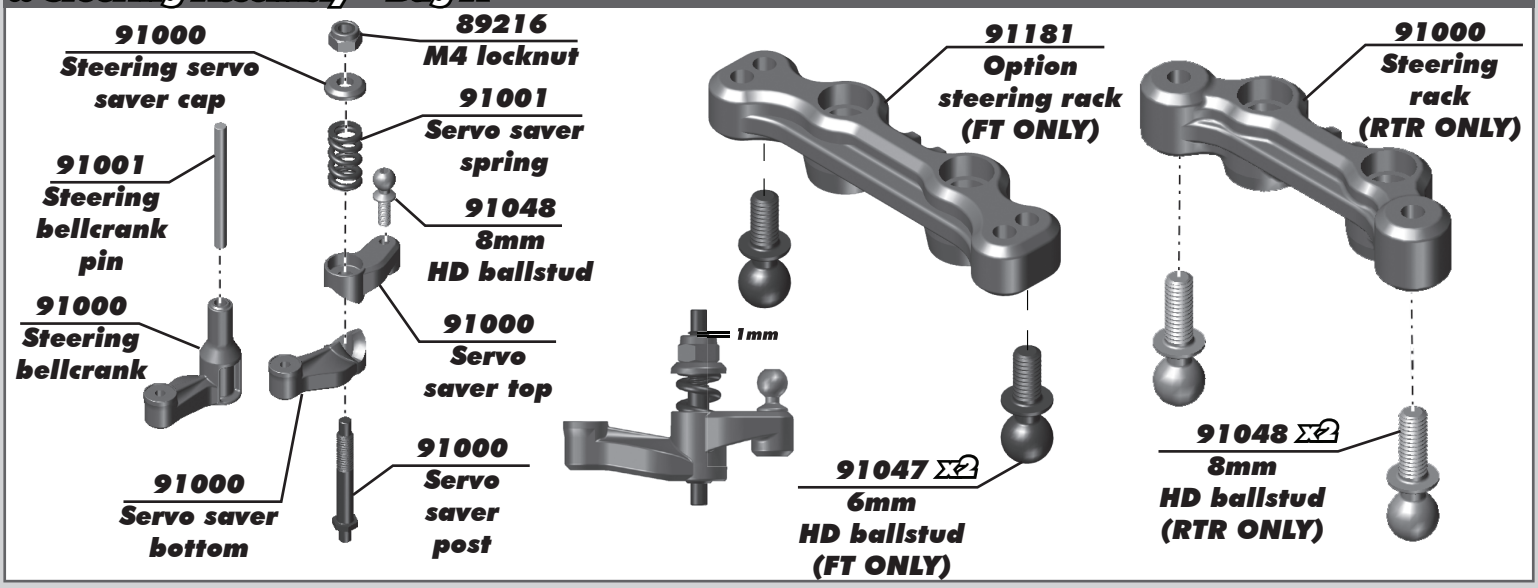

:: Steering Assembly (cont.) - Bag A

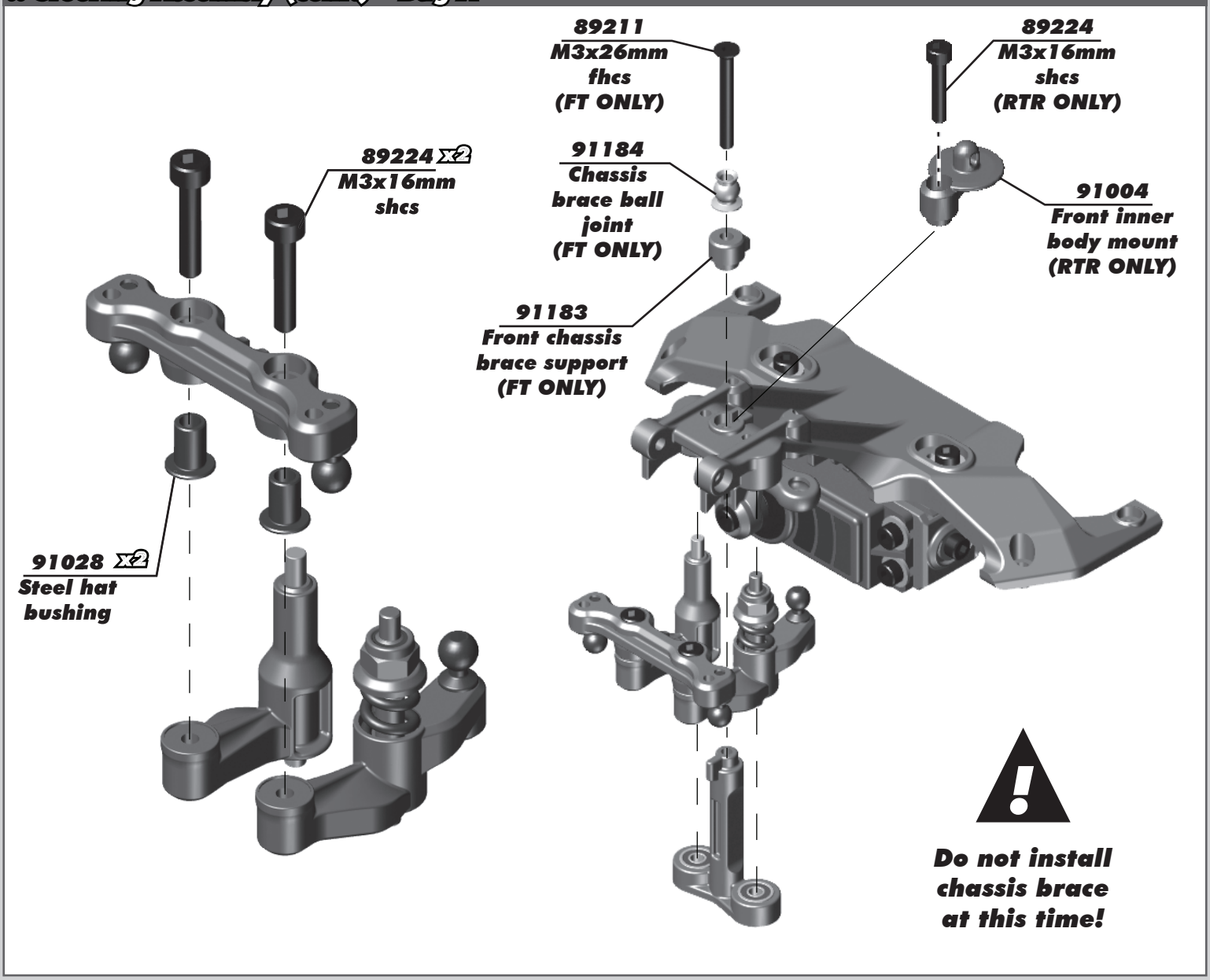

:: Differential Assembly - Bag B

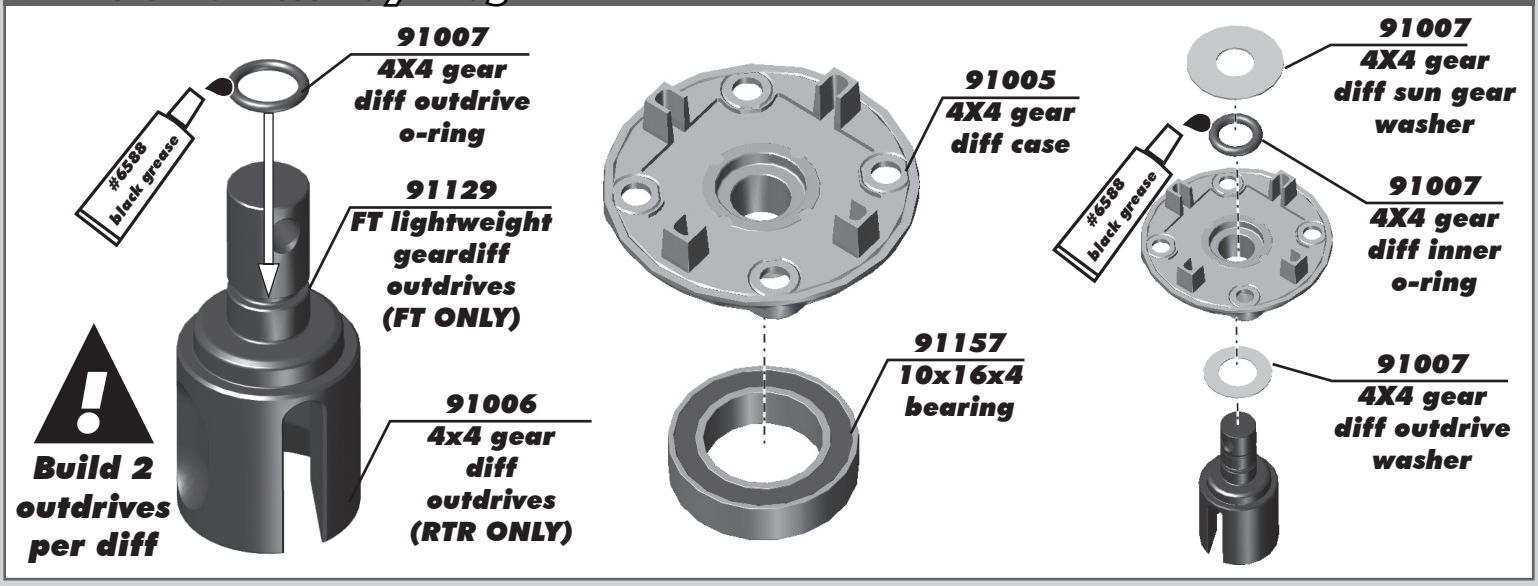

:: Differential Assembly (cont.) - Bag B

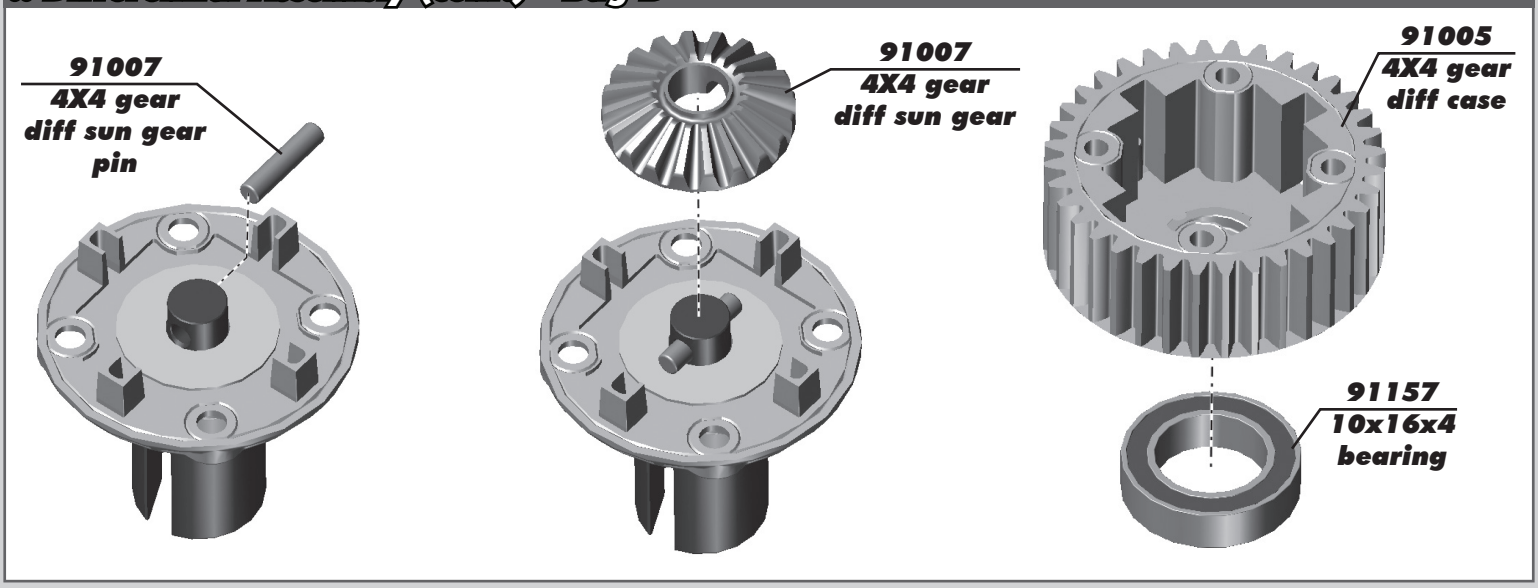

:: Differential Assembly (cont.) - Bag B

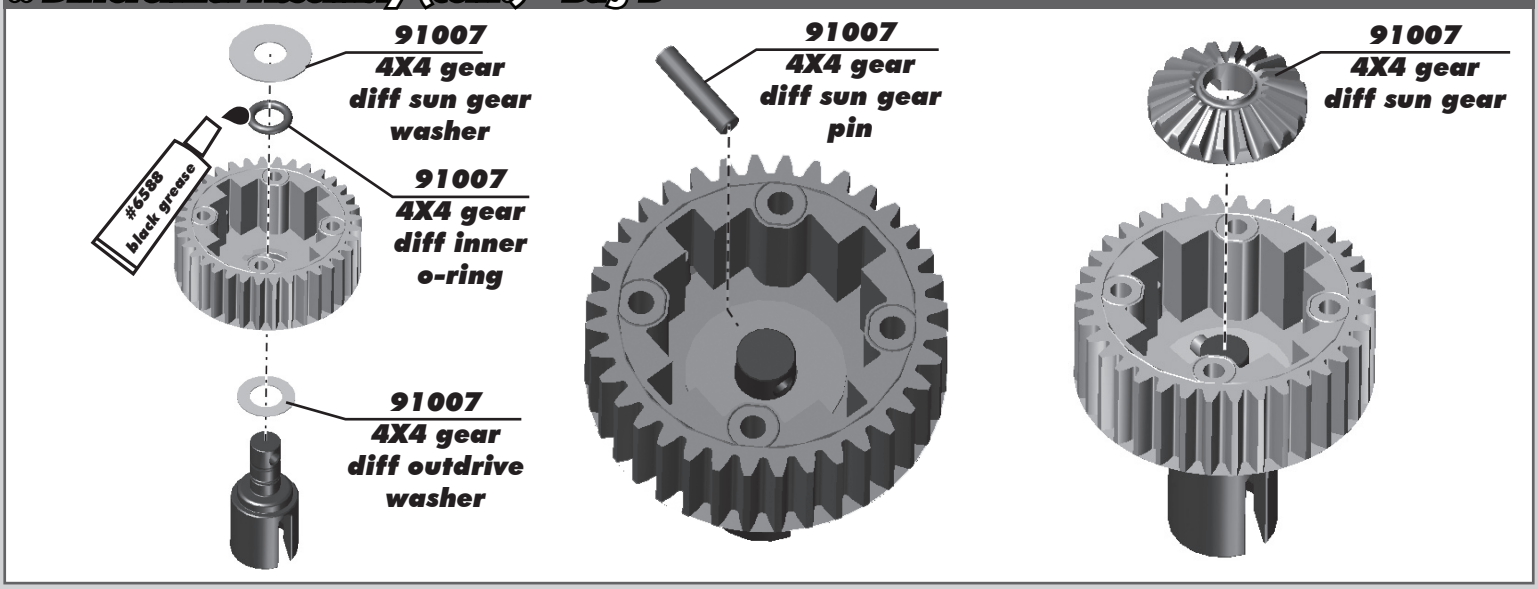

:: Differential Assembly (cont.) - Bag B

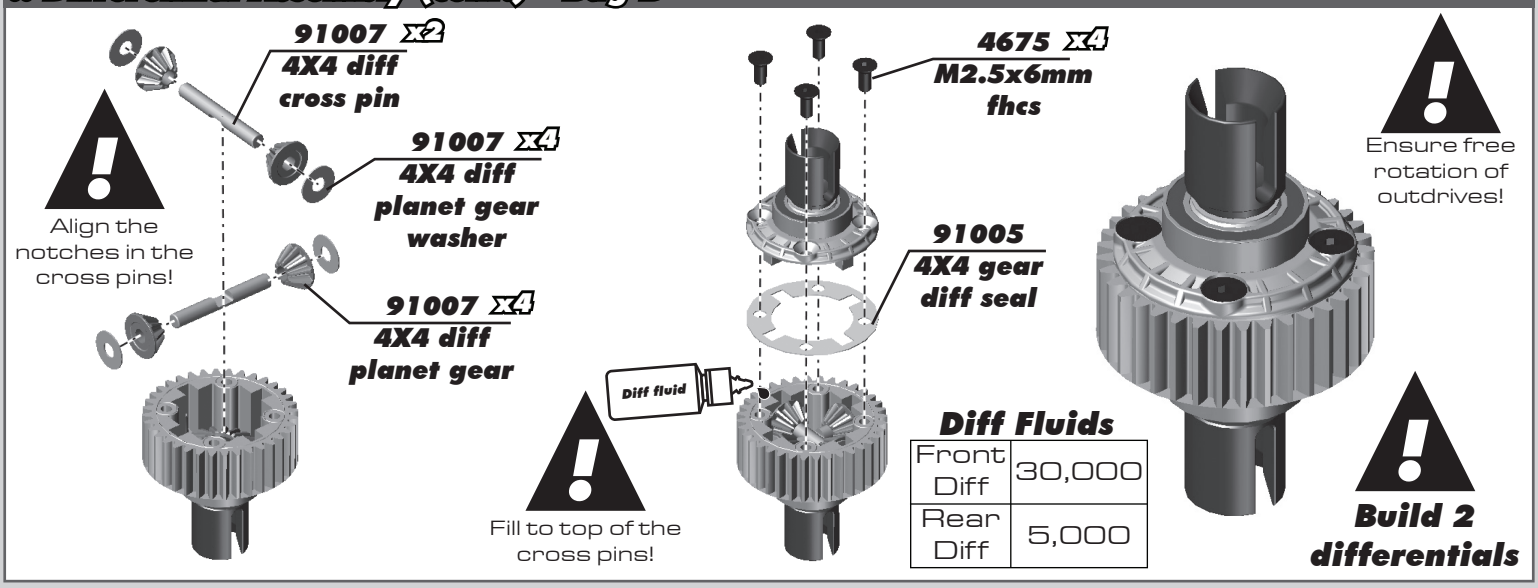

Diff Fluids

Front Diff	30,000
Rear Diff	5,000

:: Front Gearbox Assembly - Bag C

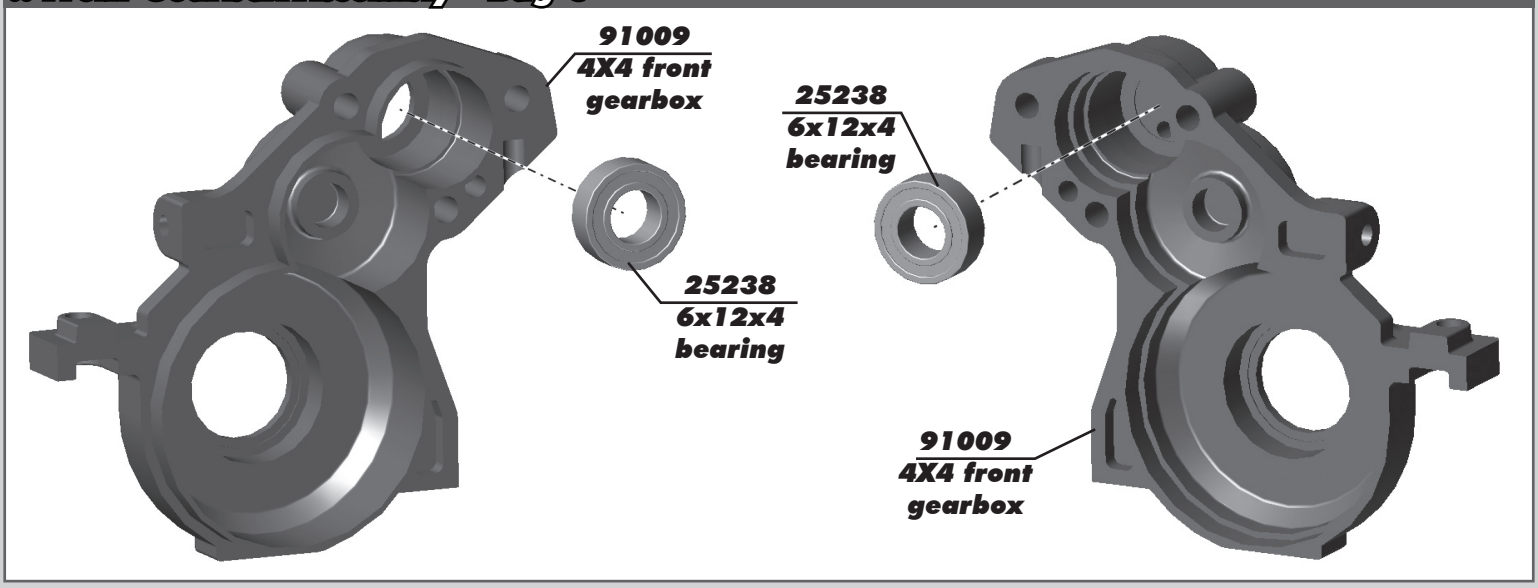

:: Front Gearbox Assembly (cont.) - Bag C

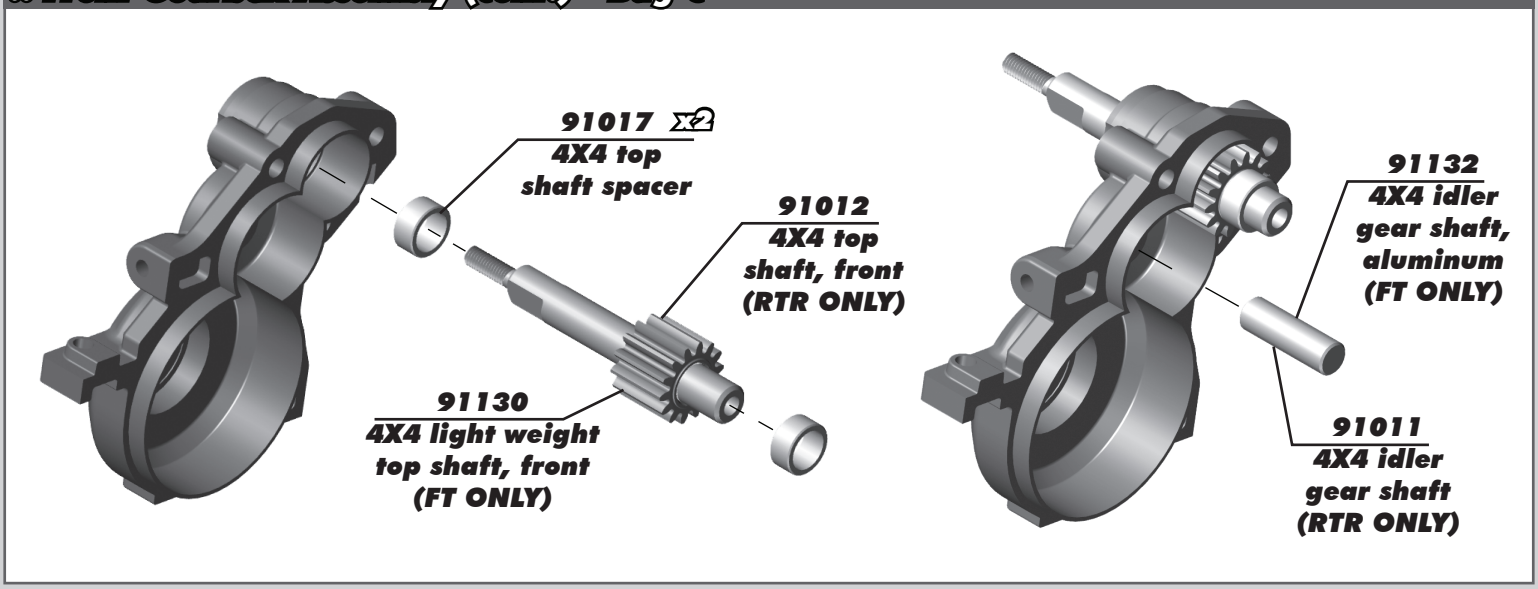

:: Front Gearbox Assembly (cont.) - Bag C

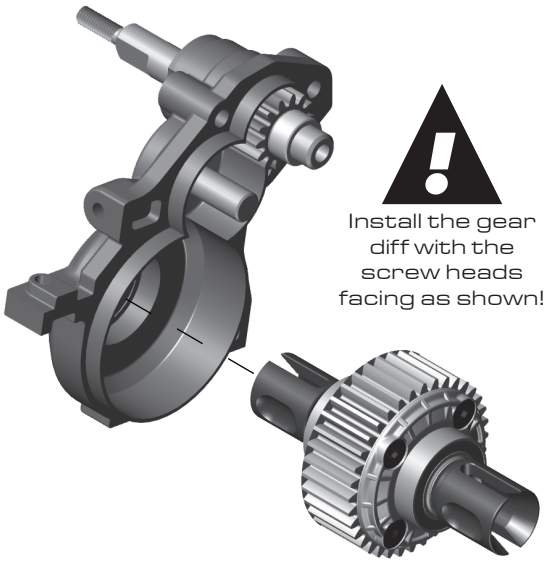

Install the gear diff with the screw heads facing as shown!

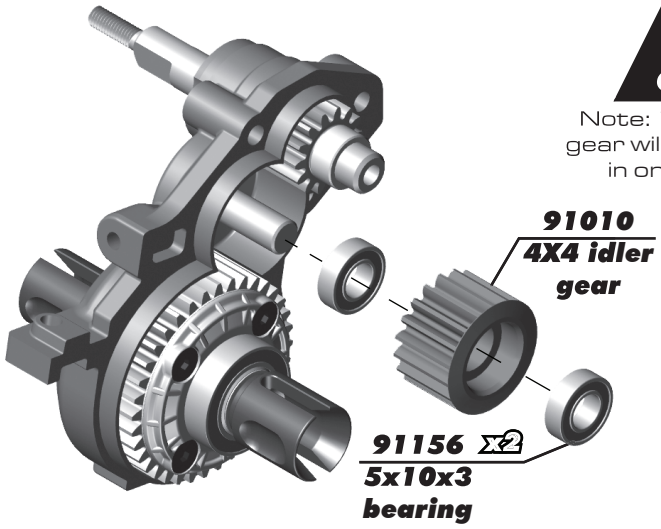

Note: The idler gear will only slide in one way!

:: Front Gearbox Assembly (cont.) - Bag C

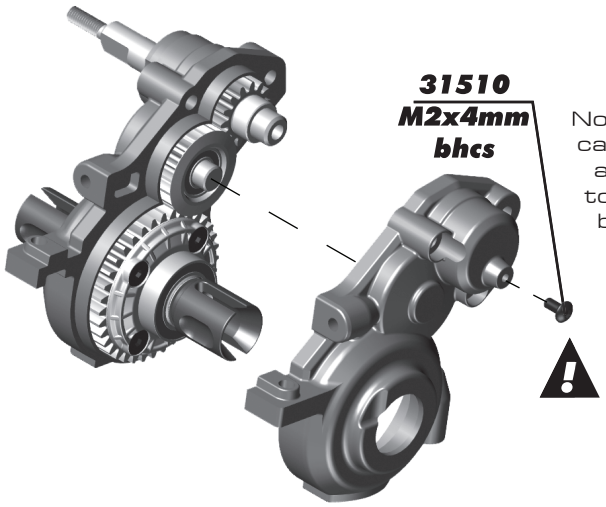

Note: The M2x4mm bhcs can be removed to insert a tool through the hole to remove the top shaft bearing from the gear case!

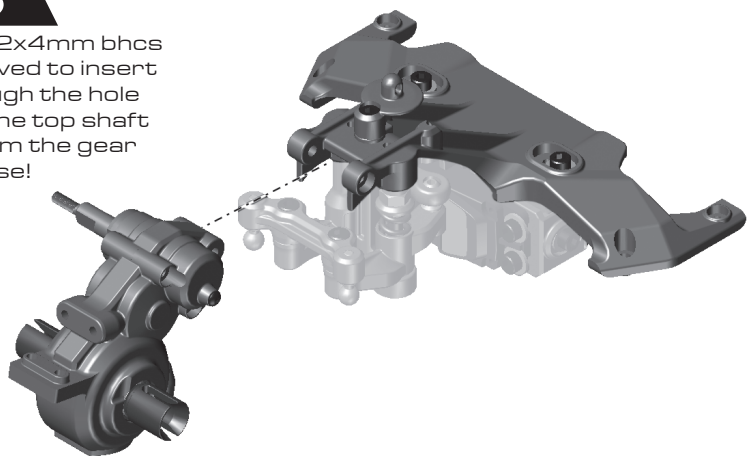

:: Front Gearbox Assembly (cont.) - Bag C

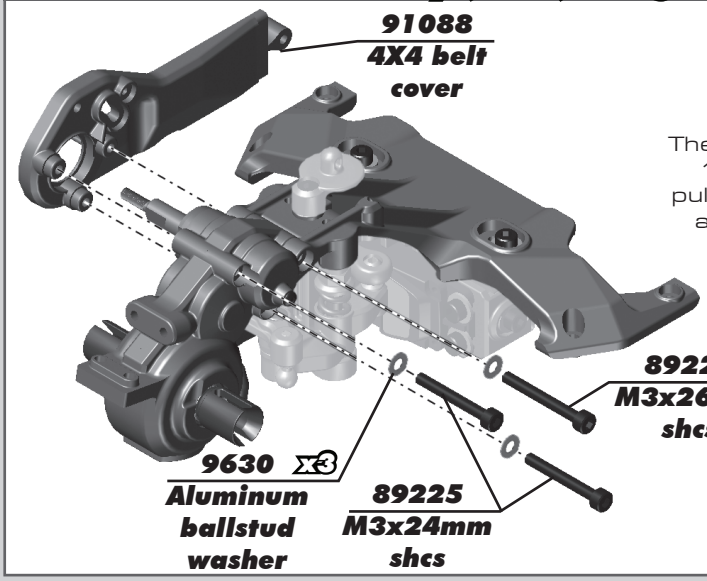

The included optional 19 tooth clicker pulley is marked with a "O" (overdrive).

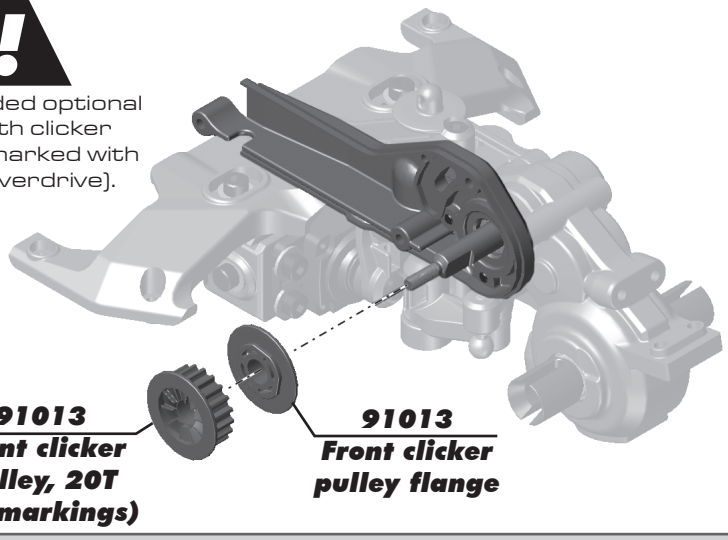

:: Front Gearbox Assembly (cont.) - Bag C

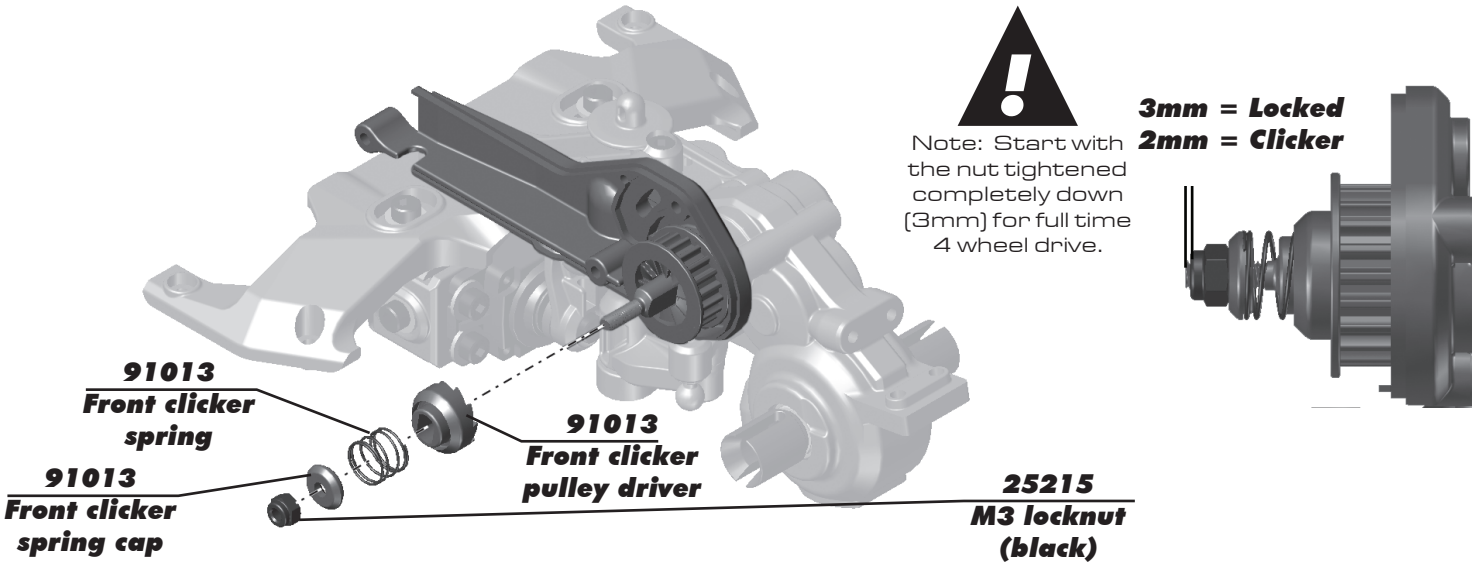

:: Front Gearbox Assembly (cont.) - Bag C

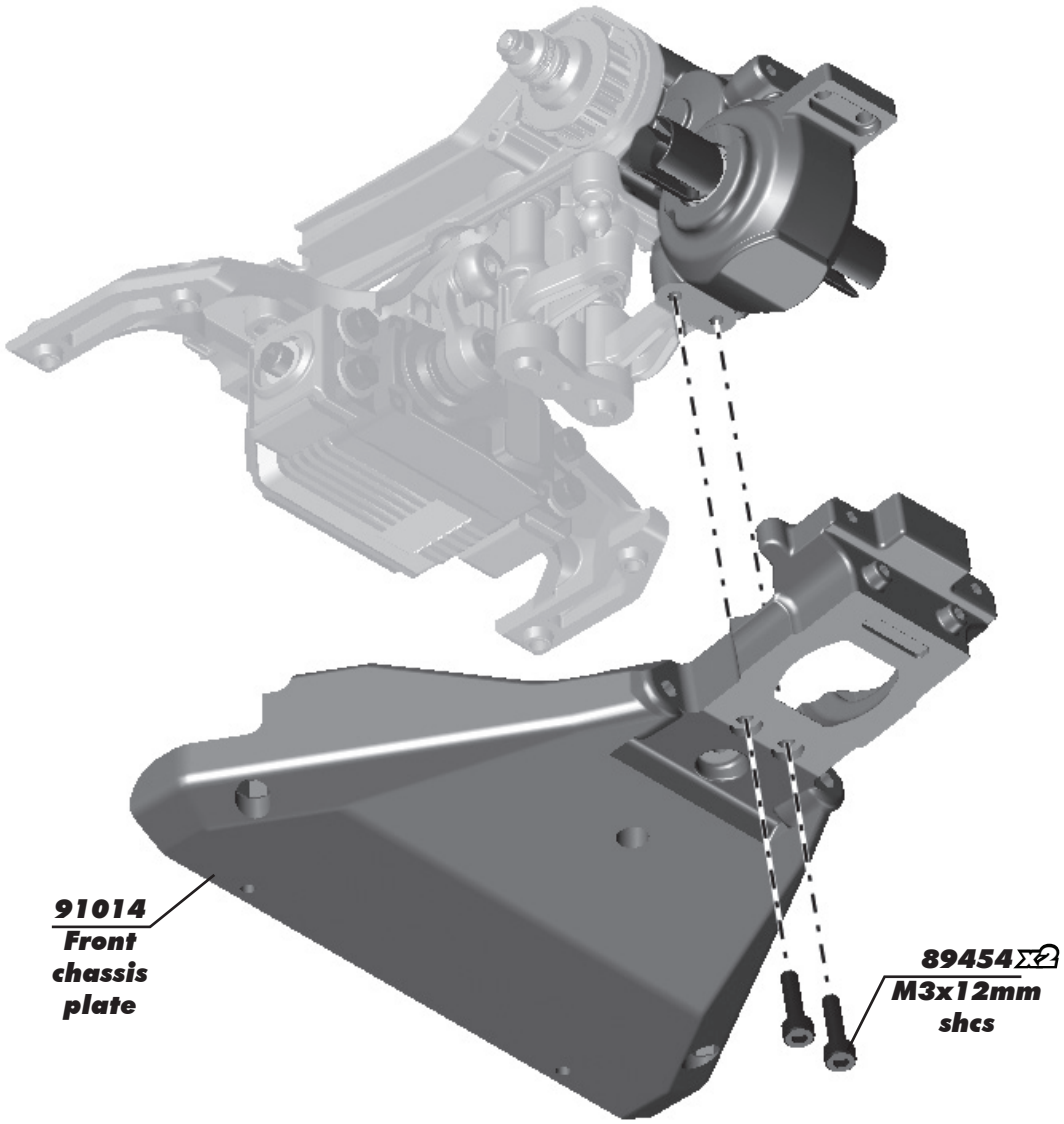

:: Rear Gearbox Assembly - Bag D

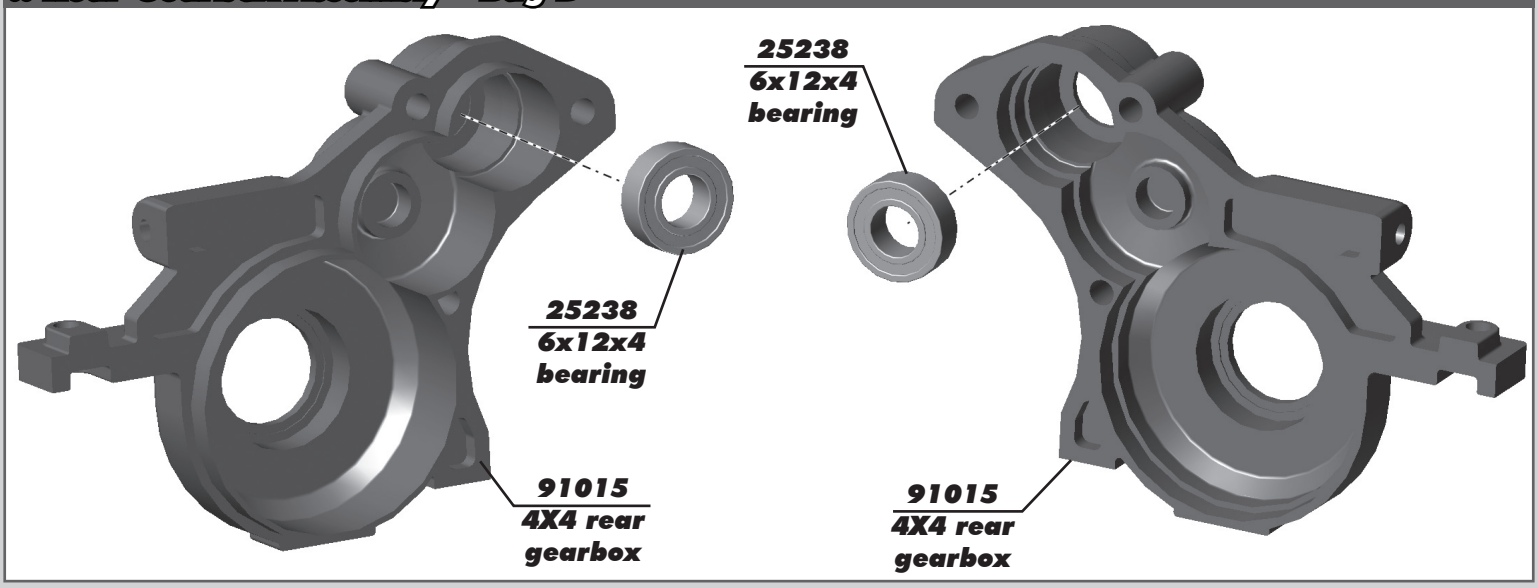

:: Rear Gearbox Assembly (cont.) - Bag D

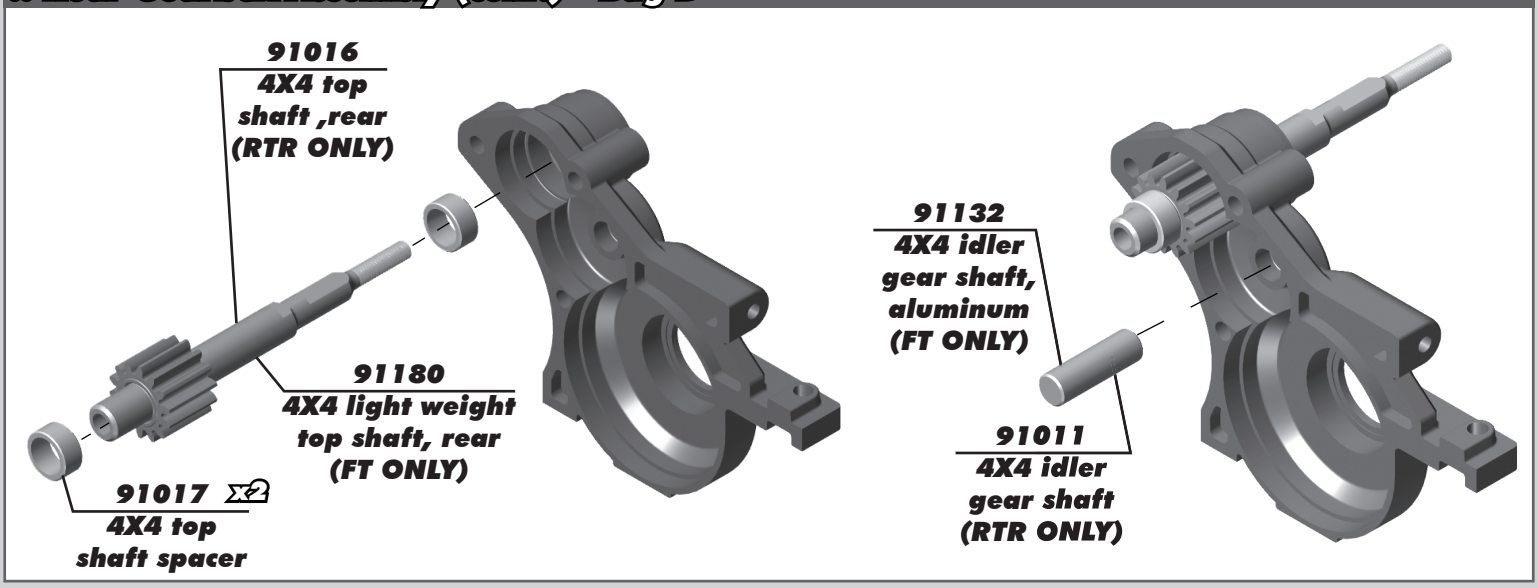

:: Rear Gearbox Assembly (cont.) - Bag D

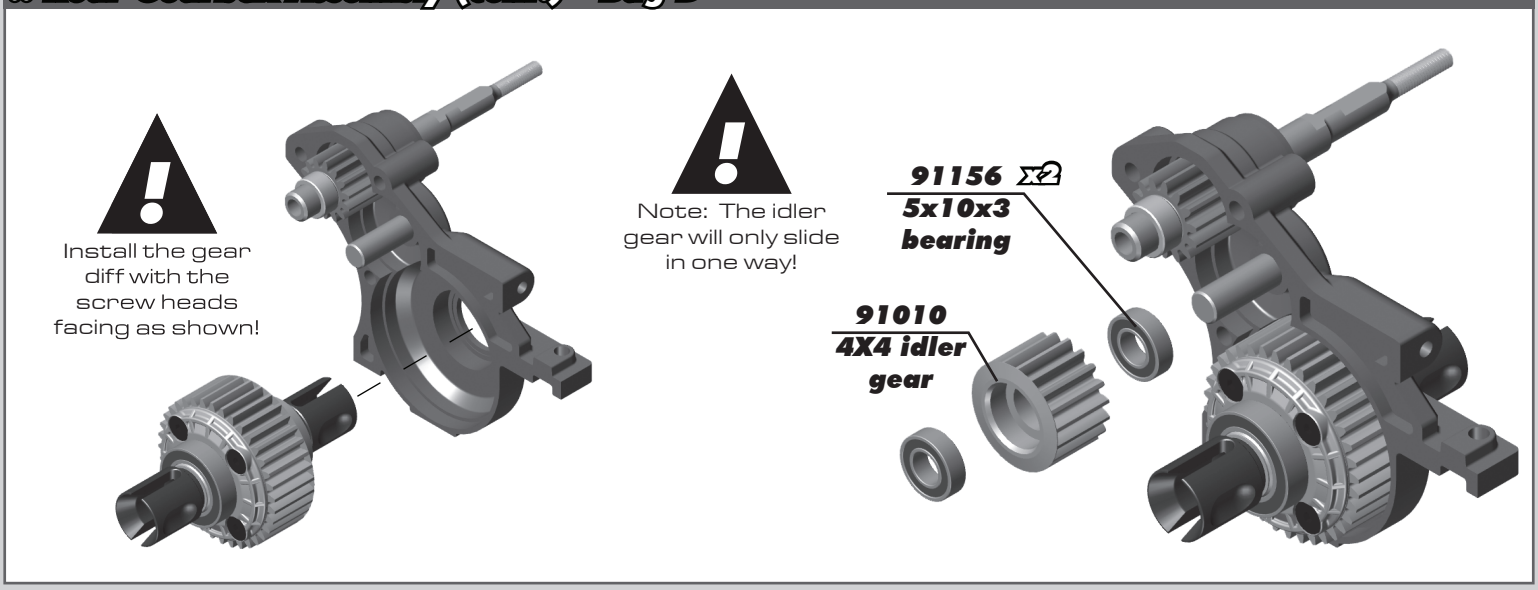

:: Rear Gearbox Assembly (cont.) - Bag D

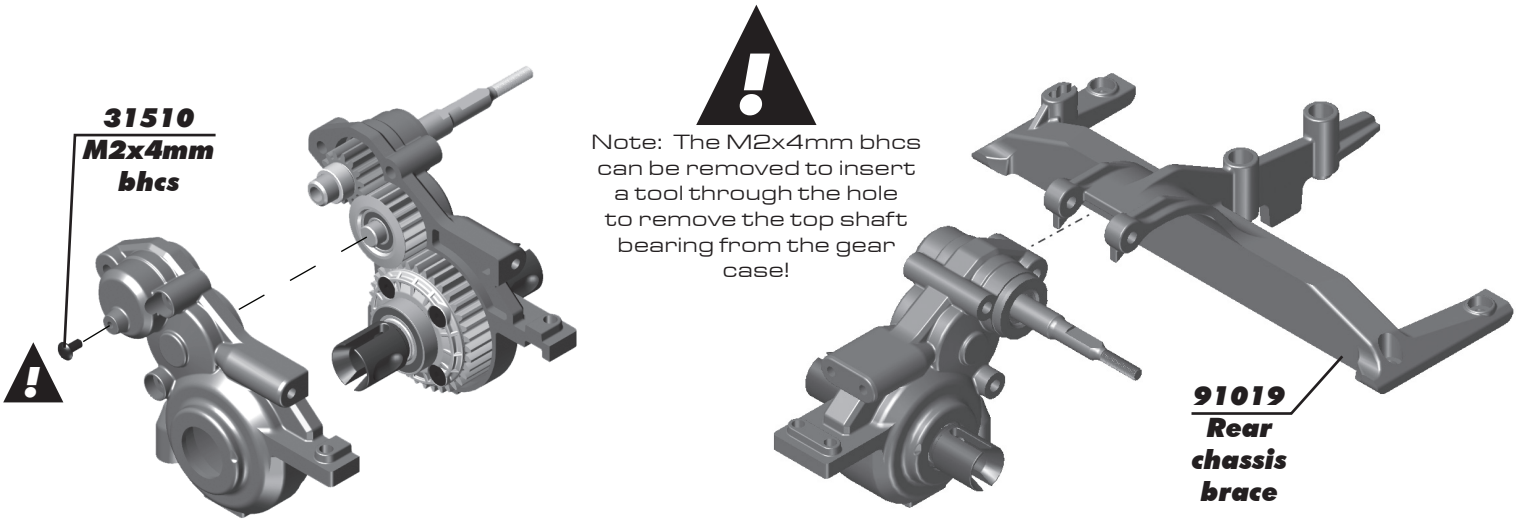

:: Rear Gearbox Assembly (cont.) - Bag D

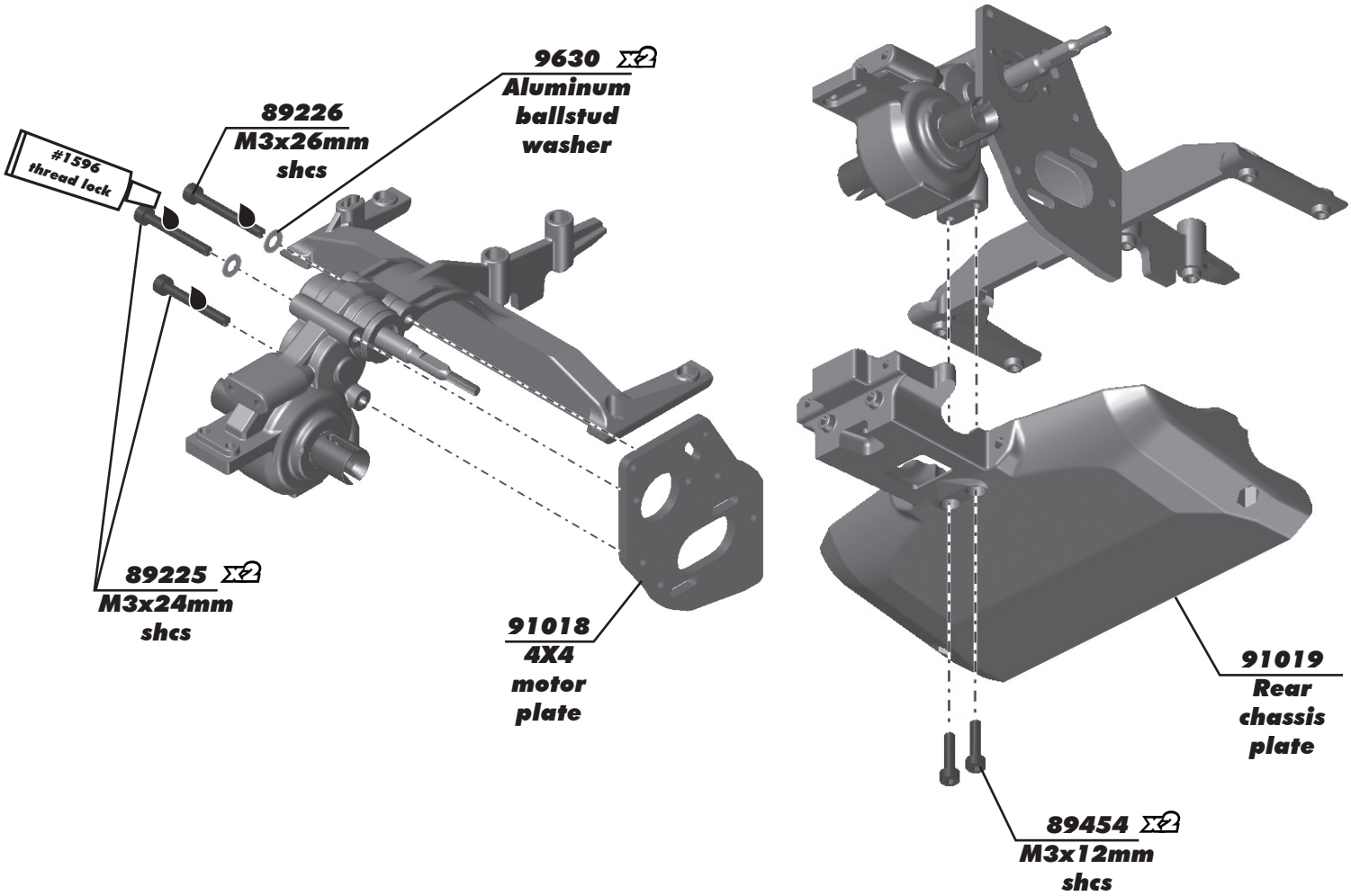

:: Front Shock Tower Assembly - Bag E-EE

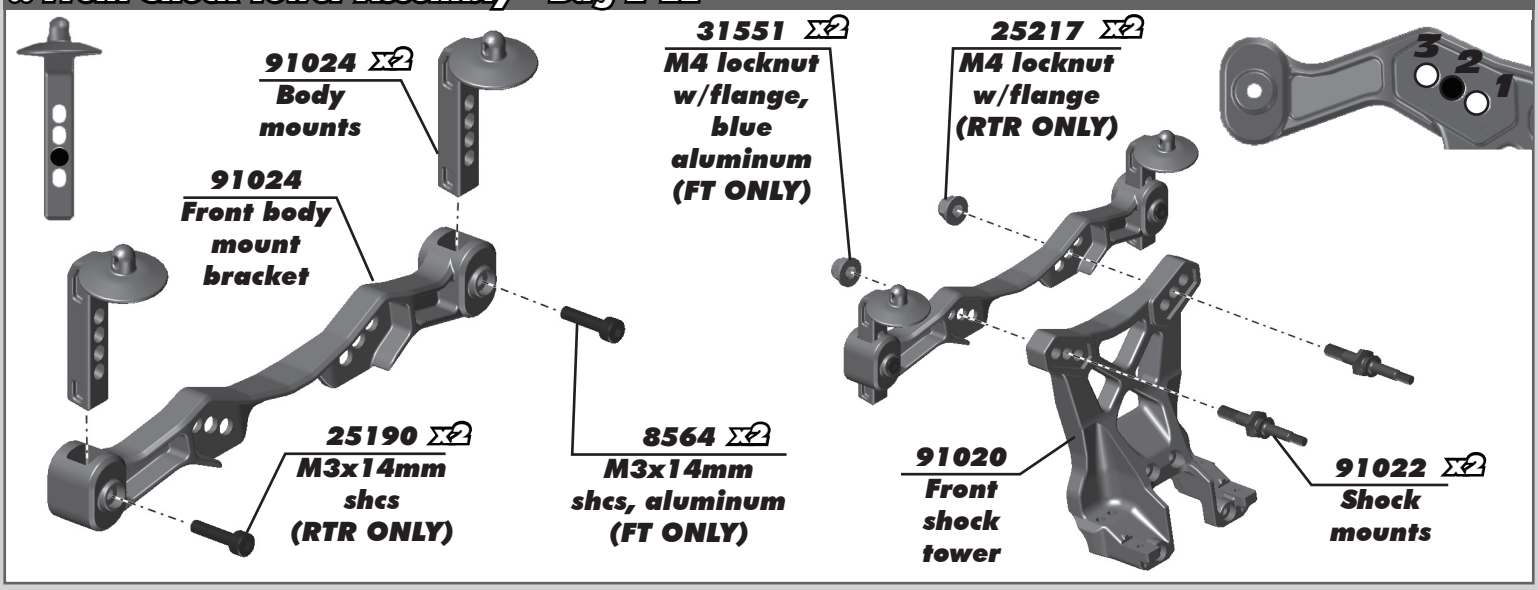

:: Front Shock Tower Assembly (cont.) - Bag E-EE

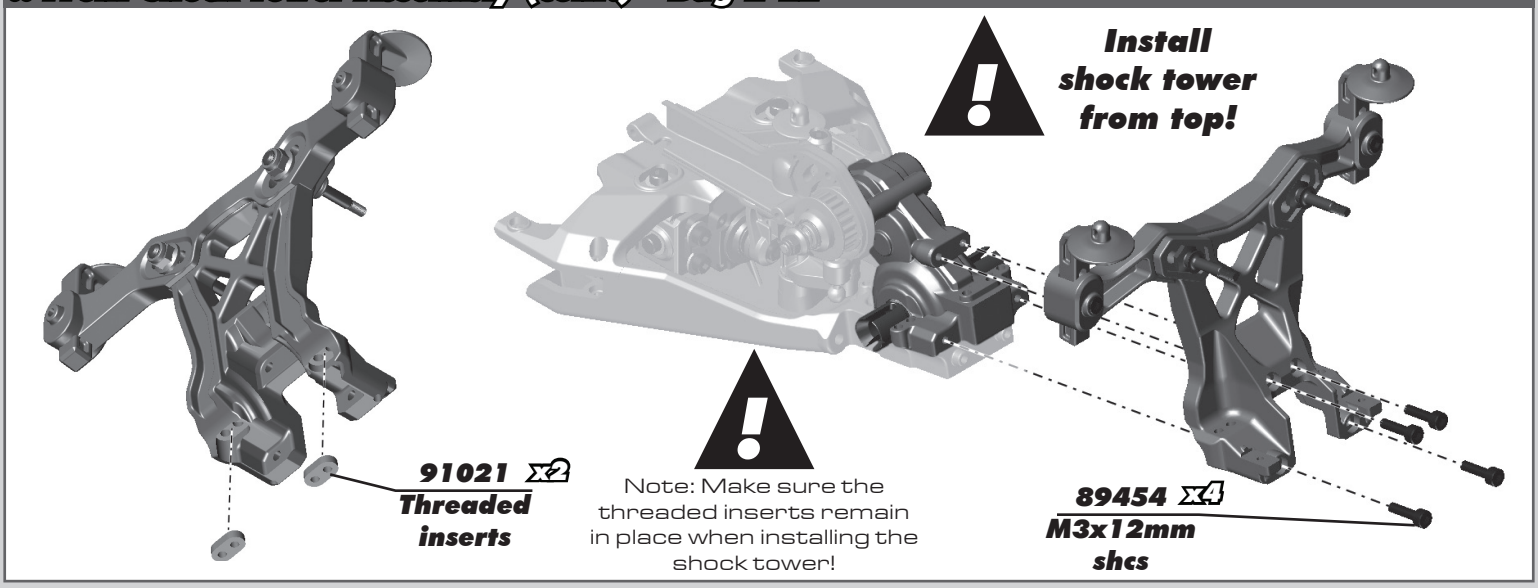

:: Front Shock Tower Assembly (cont.) - Bag E-EE

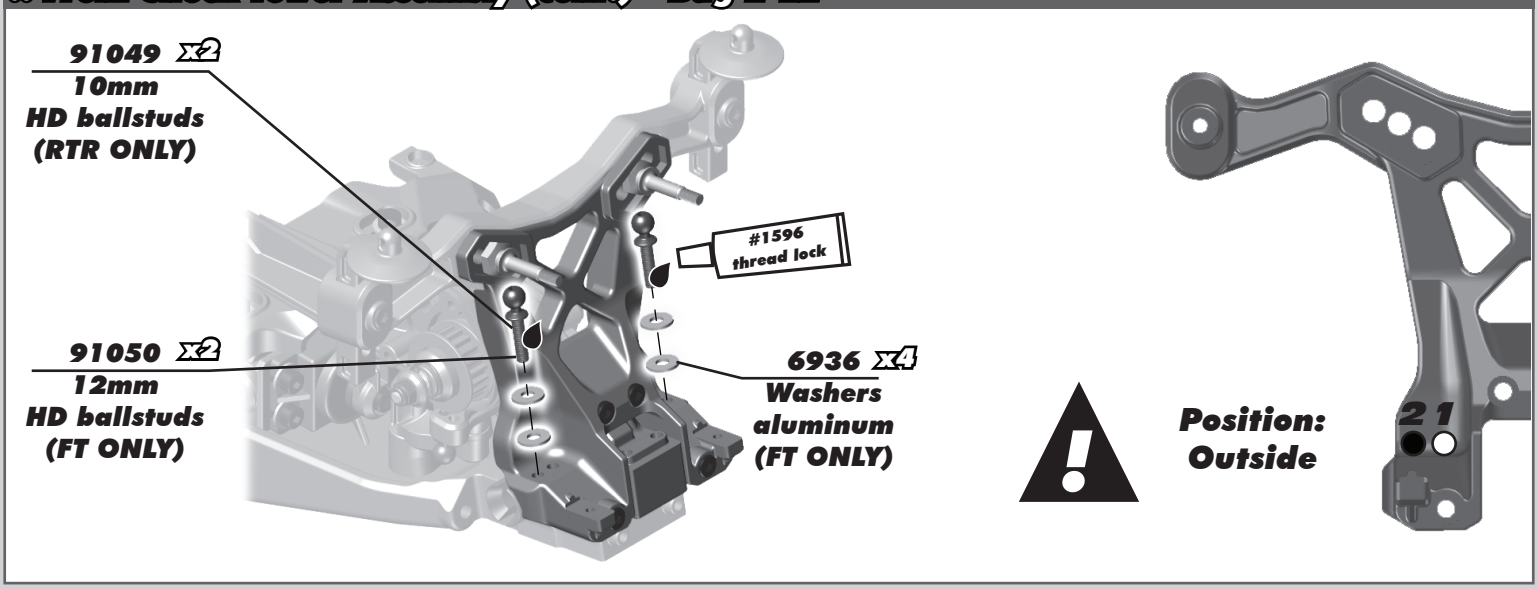

:: Rear Shock Tower Assembly - Bag F

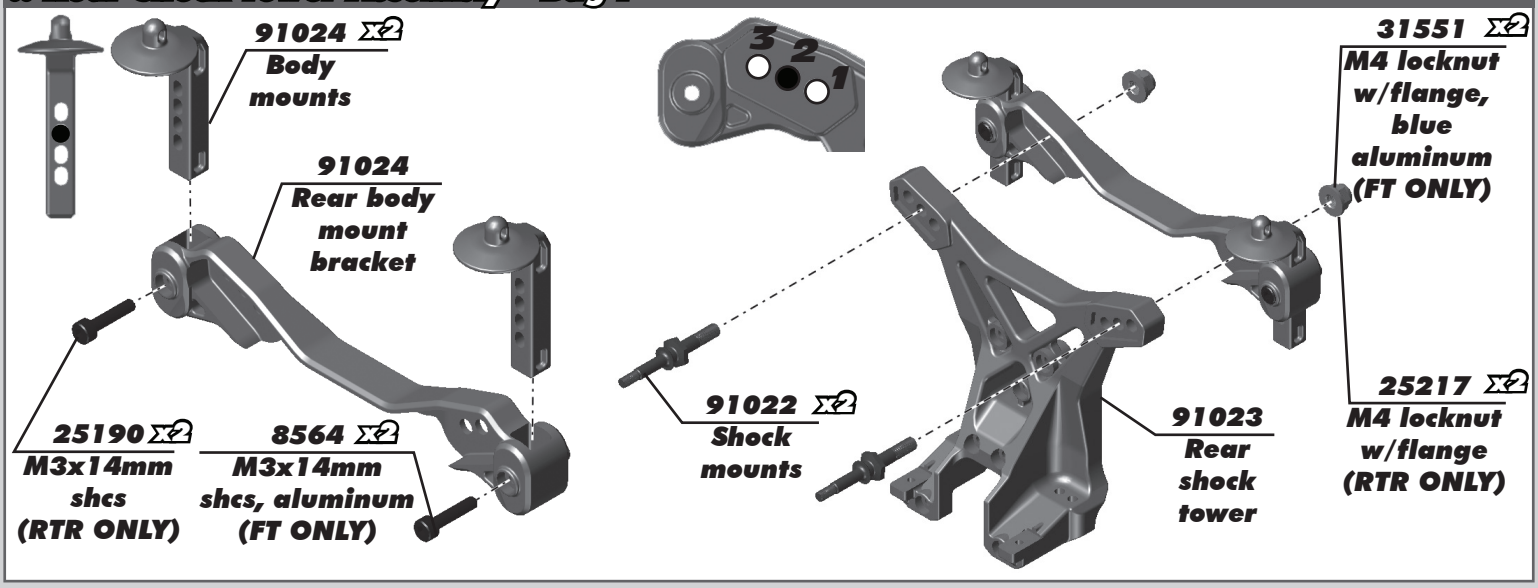

:: Rear Shock Tower Assembly (cont.) - Bag F

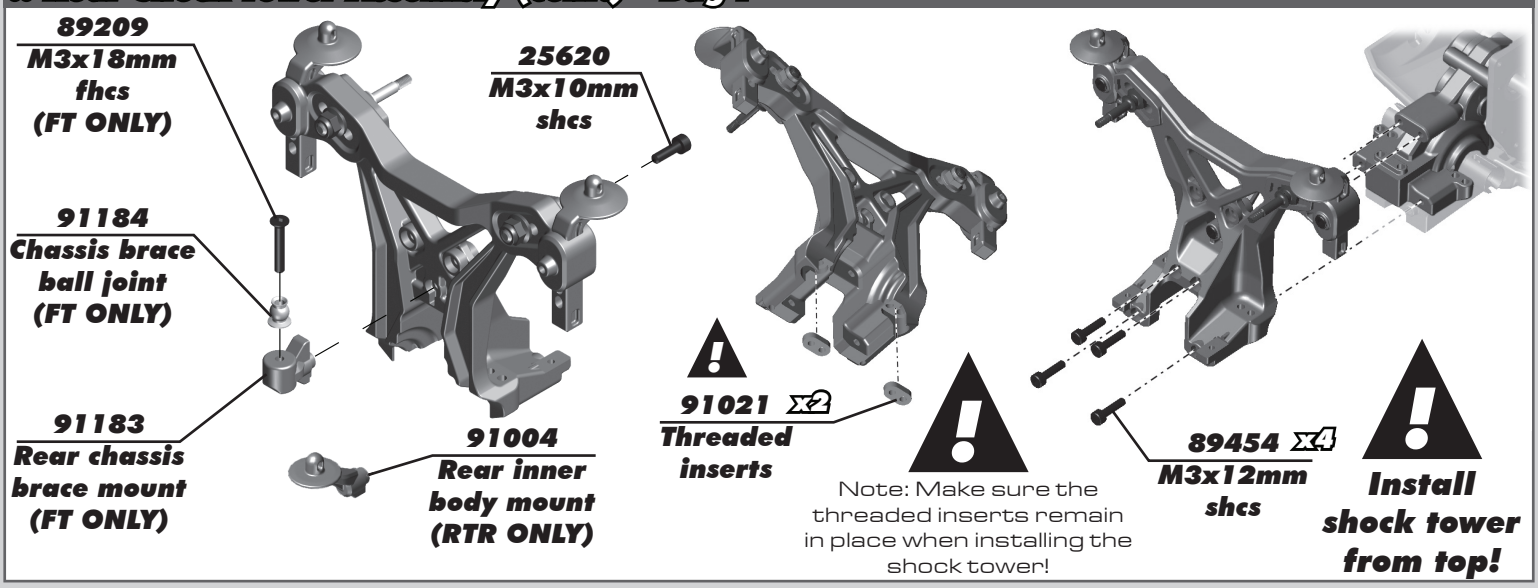

:: Rear Shock Tower Assembly (cont.) - Bag F

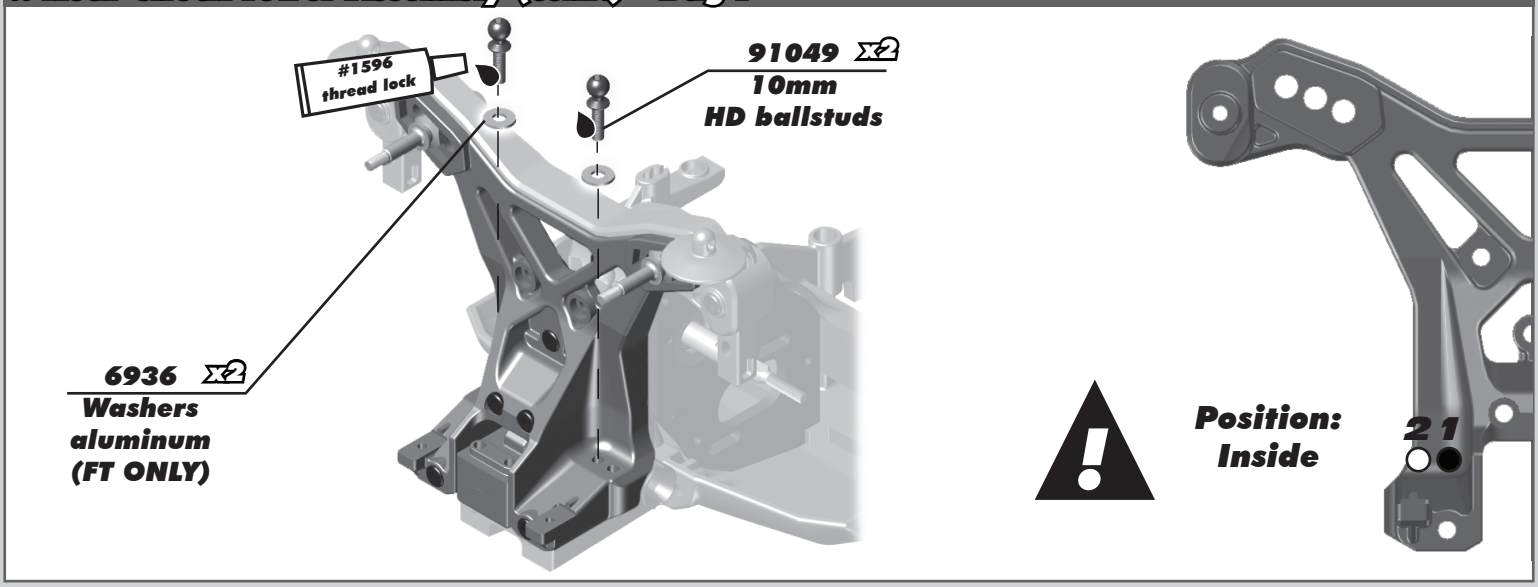

:: Front Suspension Assembly - Bag G-GG

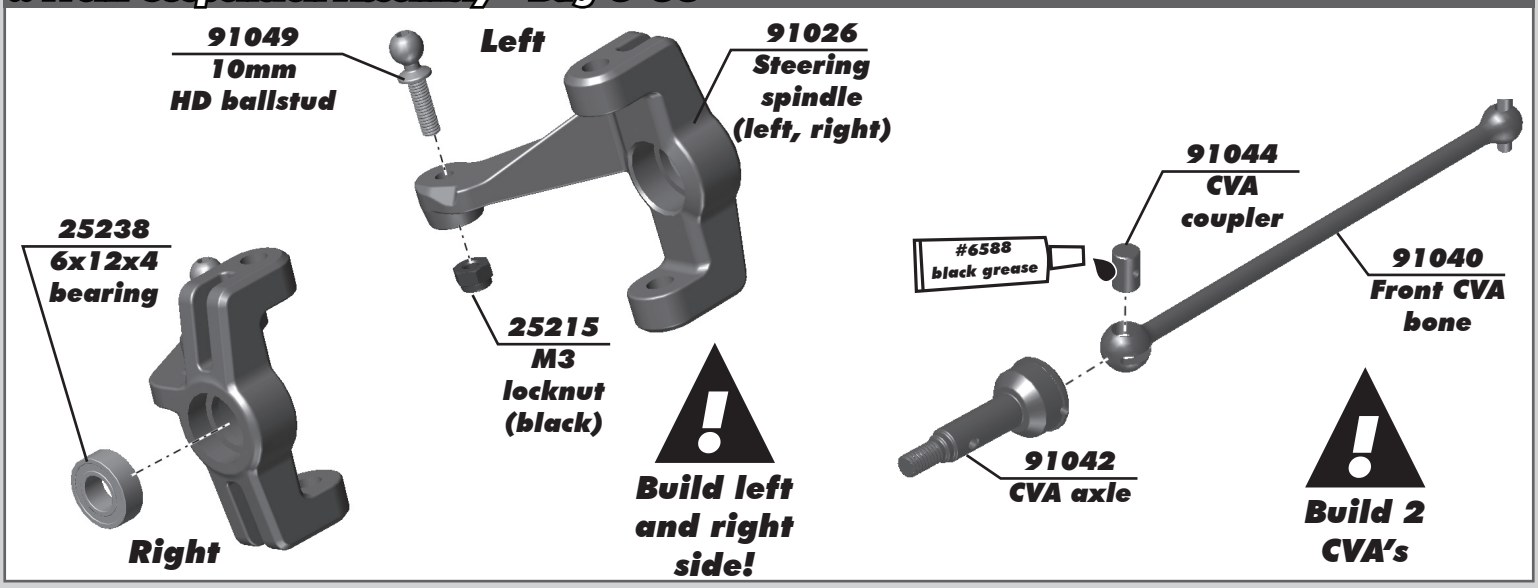

:: Front Suspension Assembly (cont.) - Bag G-GG

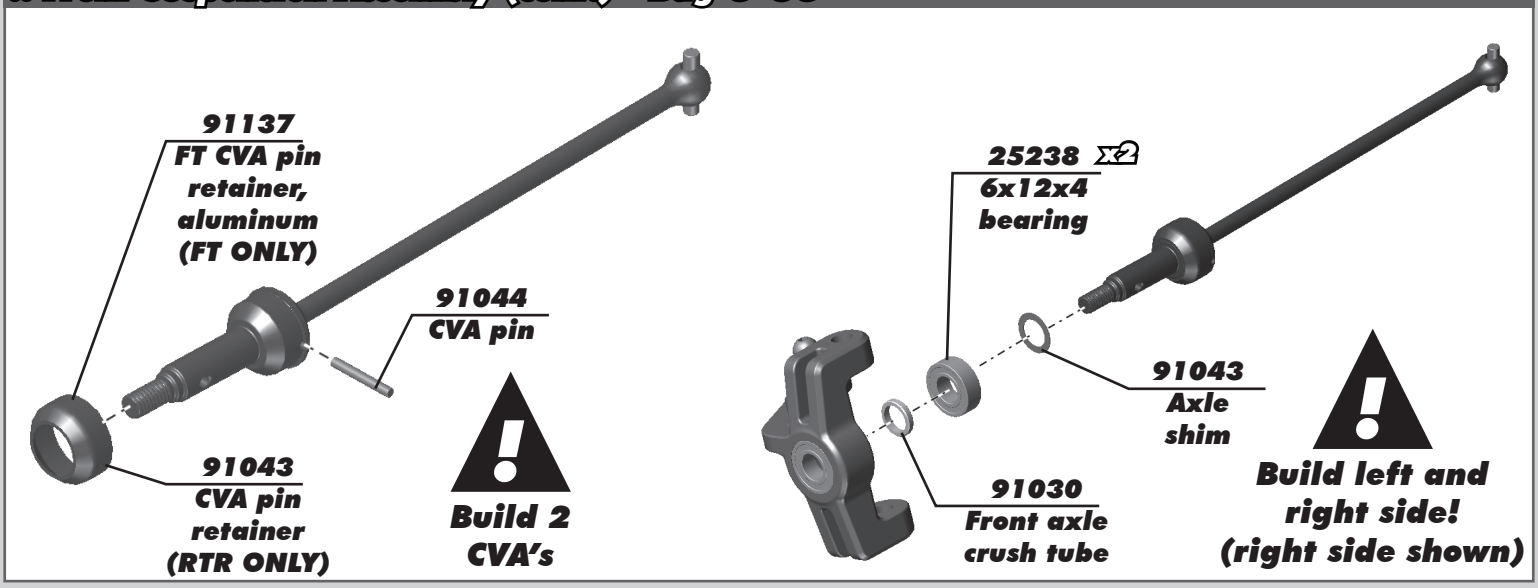

:: Front Suspension Assembly (cont.) - Bag G-GG

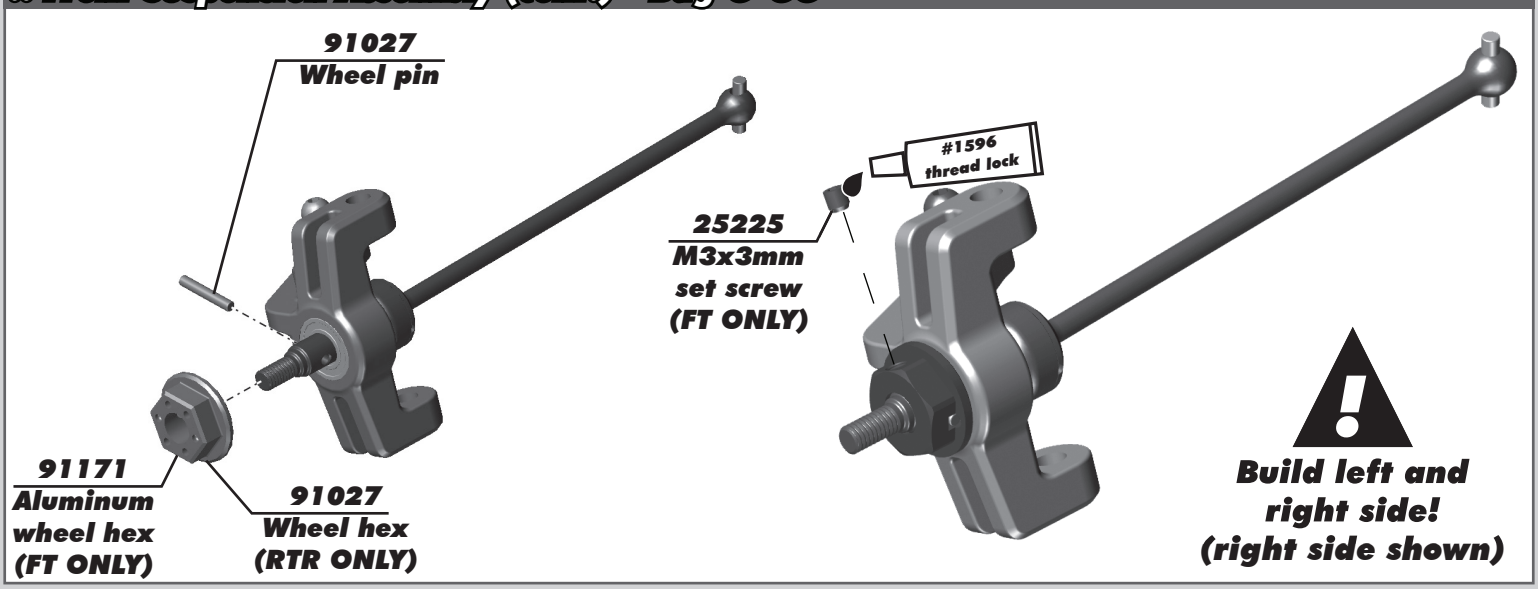

:: Front Suspension Assembly (cont.) - Bag G-GG

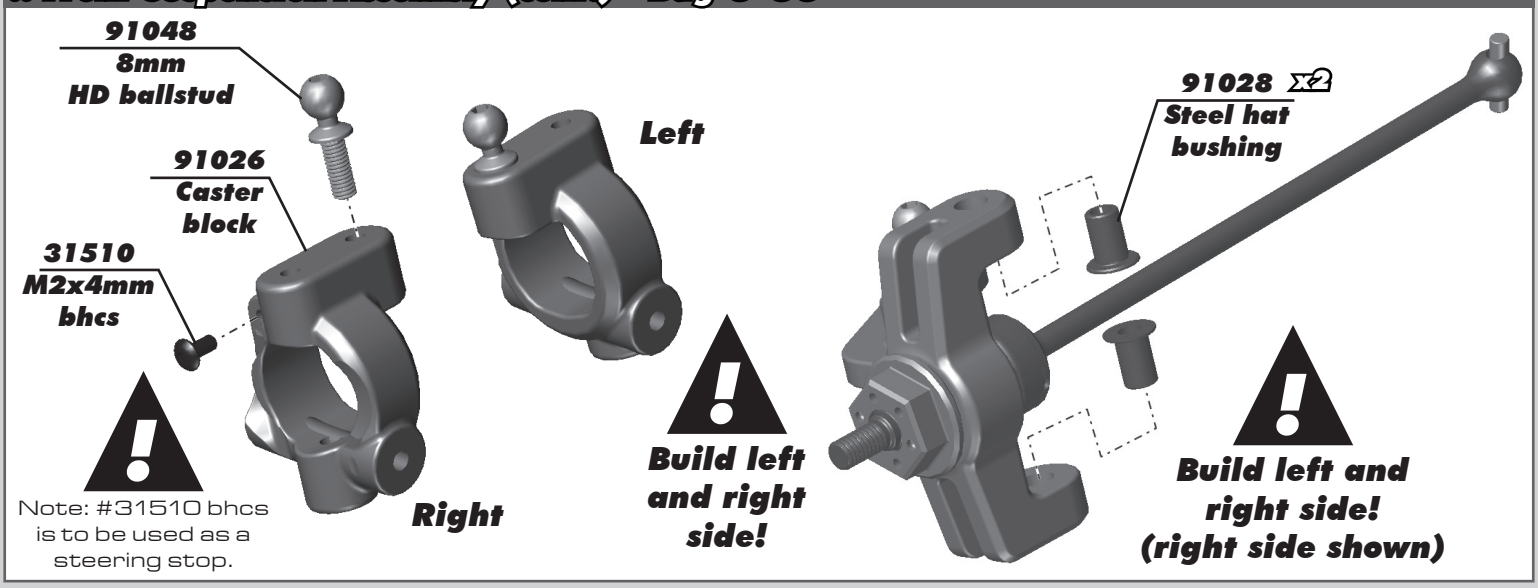

:: Front Suspension Assembly (cont.) - Bag G-GG

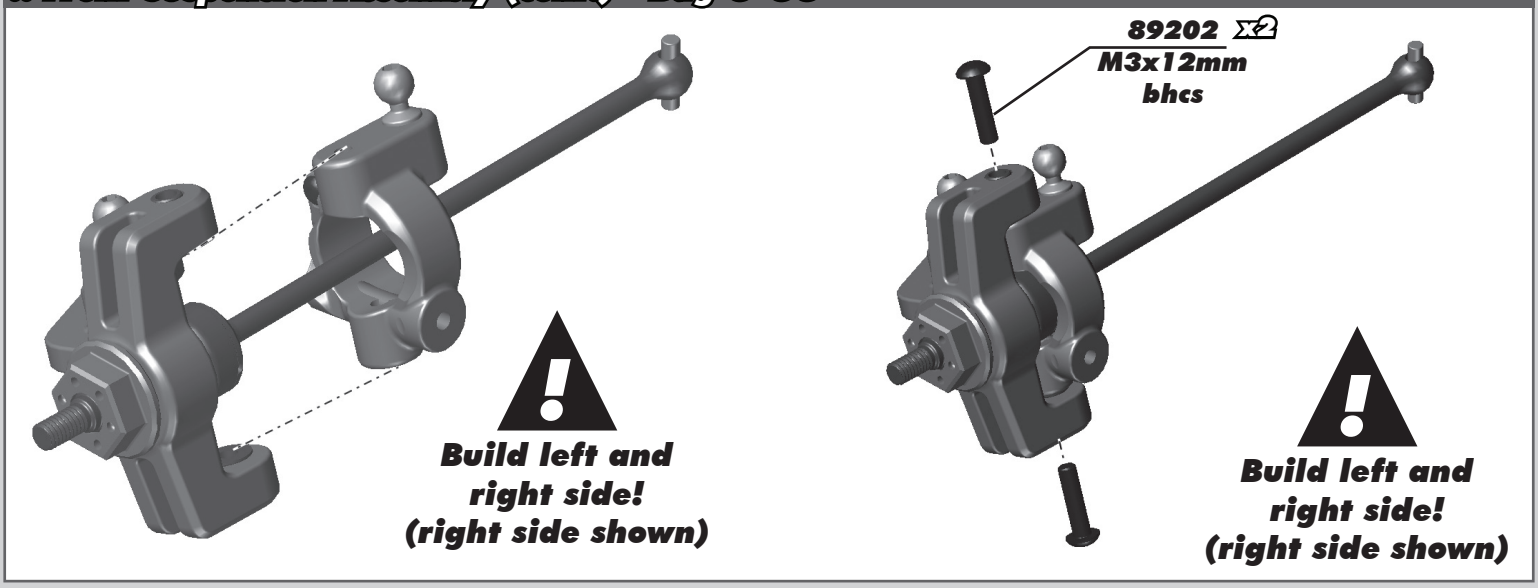

:: Front Suspension Assembly (cont.) - Bag G-GG

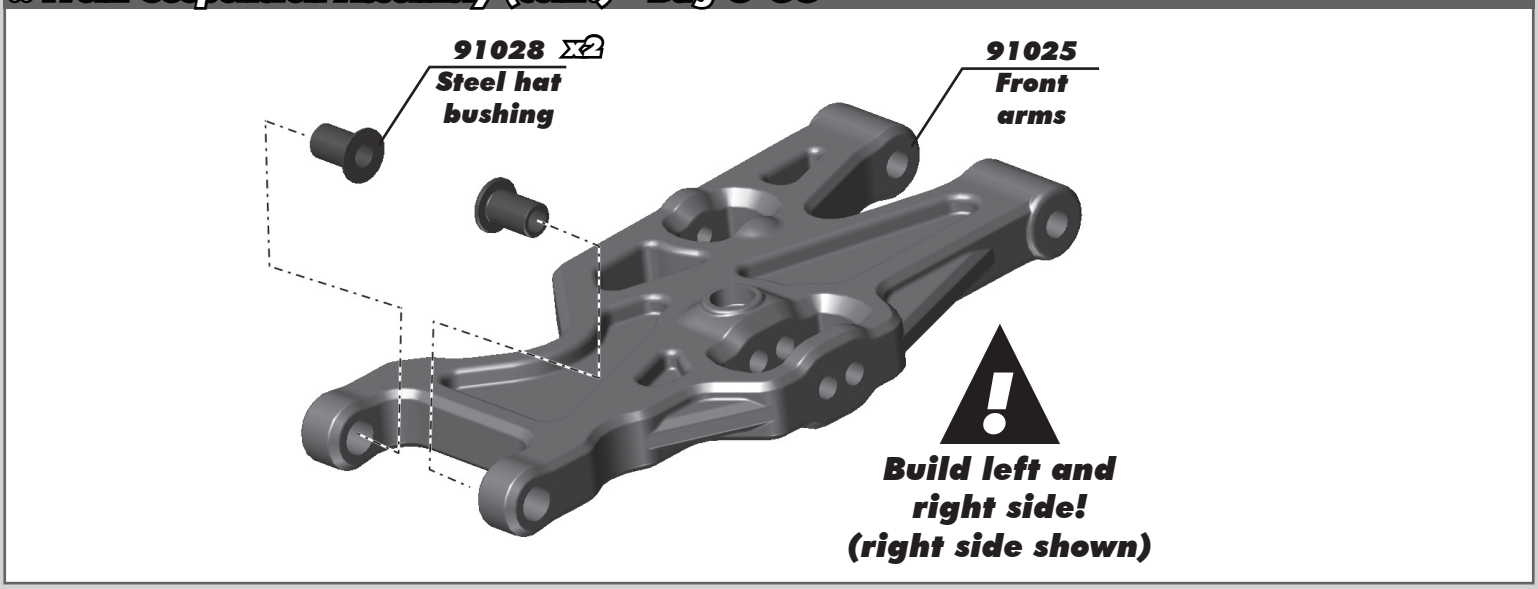

:: Front Suspension Assembly (cont.) - Bag G-GG

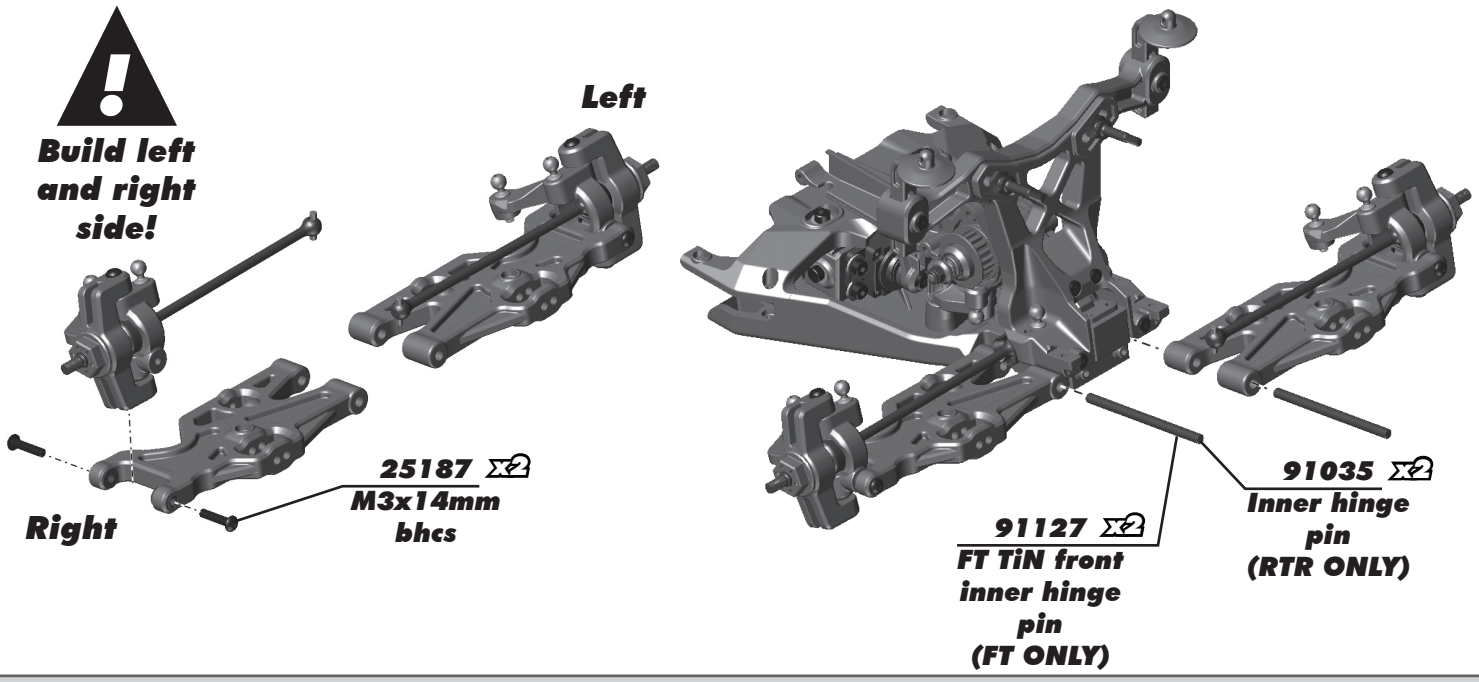

:: Front Suspension Assembly (cont.) - Bag G-GG

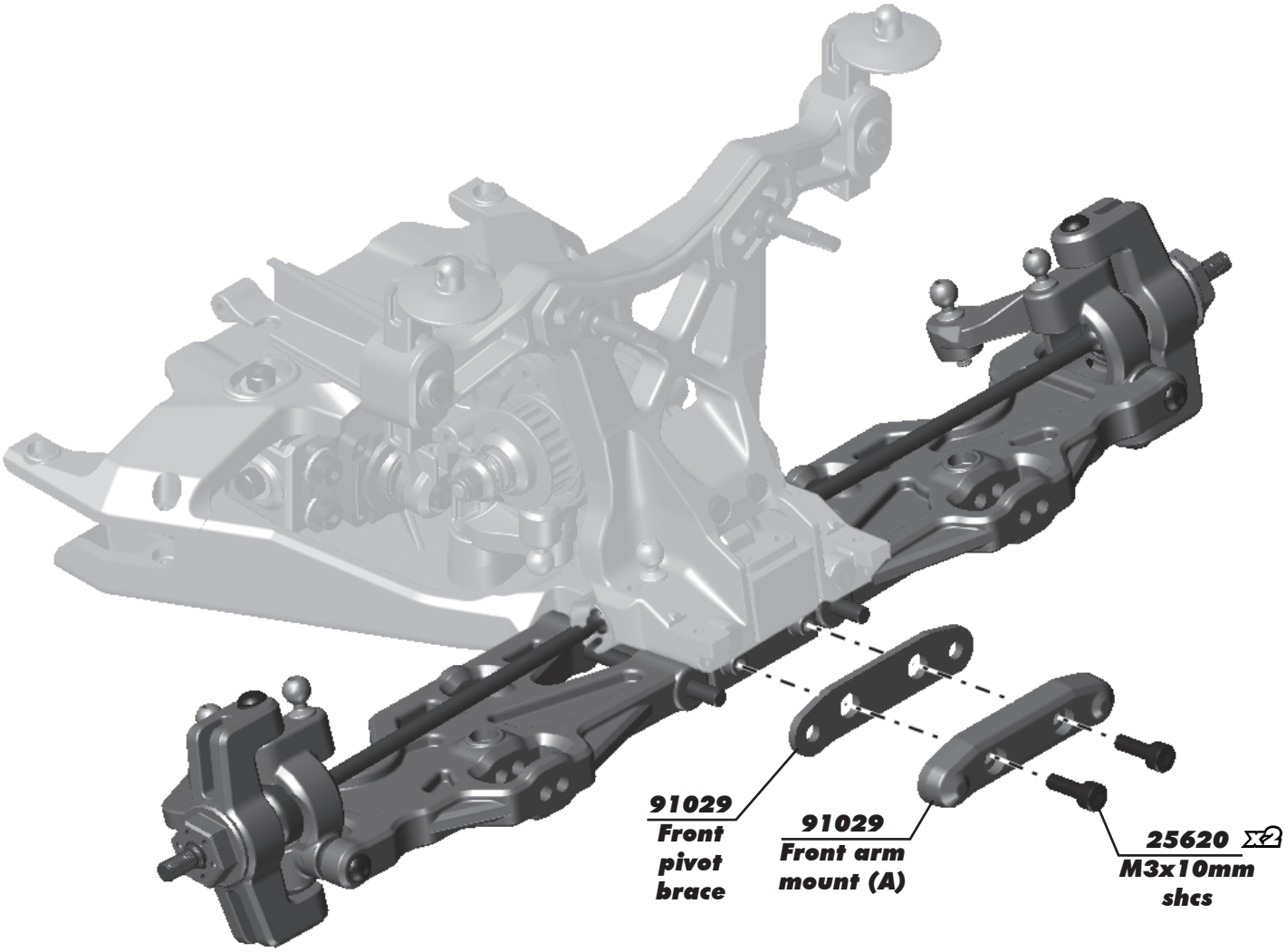

:: Front Suspension Assembly (cont.) - Bag G-GG

RTR = Pre-assembled & installed turnbuckles

Note the orientation of the ballcups! Build a left and right side!

Front Camber Link (right side shown)

Front Steering Link (right side shown)

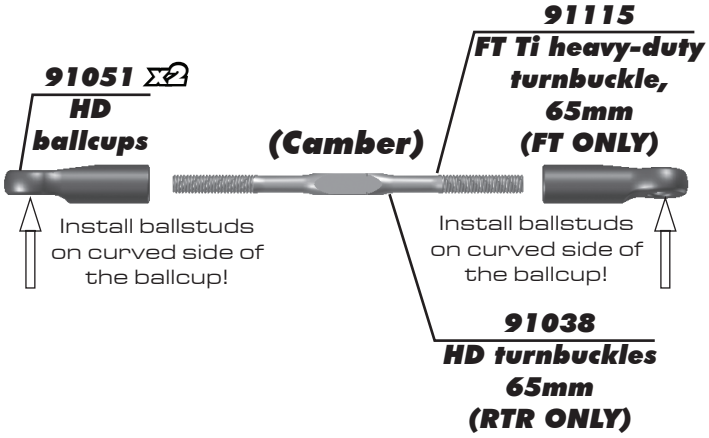

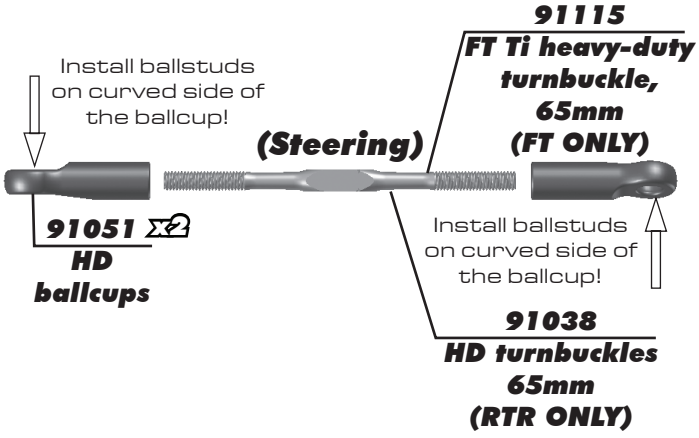

(Camber)

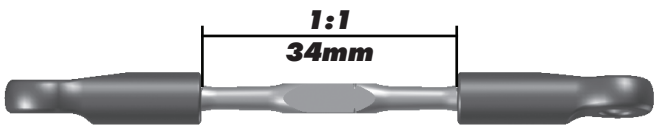

(Steering)

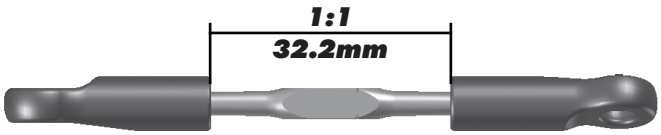

:: Front Suspension Assembly (cont.) - Bag G-GG

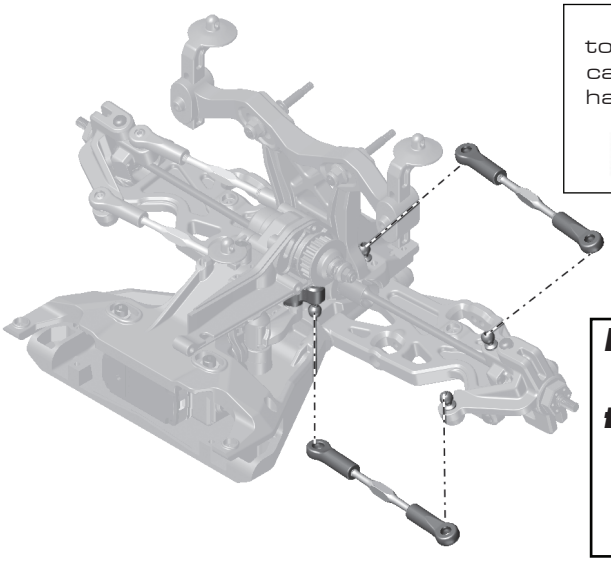

Orient the notch to the left throughout the car. It indicates which end has the left hand threads!

Install an allen wrench (as shown in picture) to lock up the steering, in order to adjust the steering turnbuckles easily!

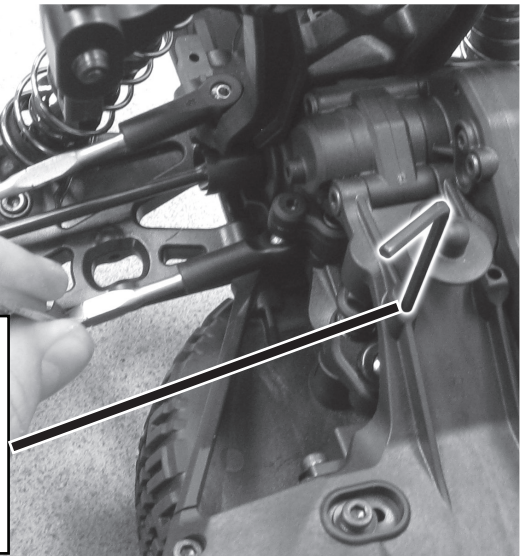

:: Rear Suspension Assembly - Bag H-HH

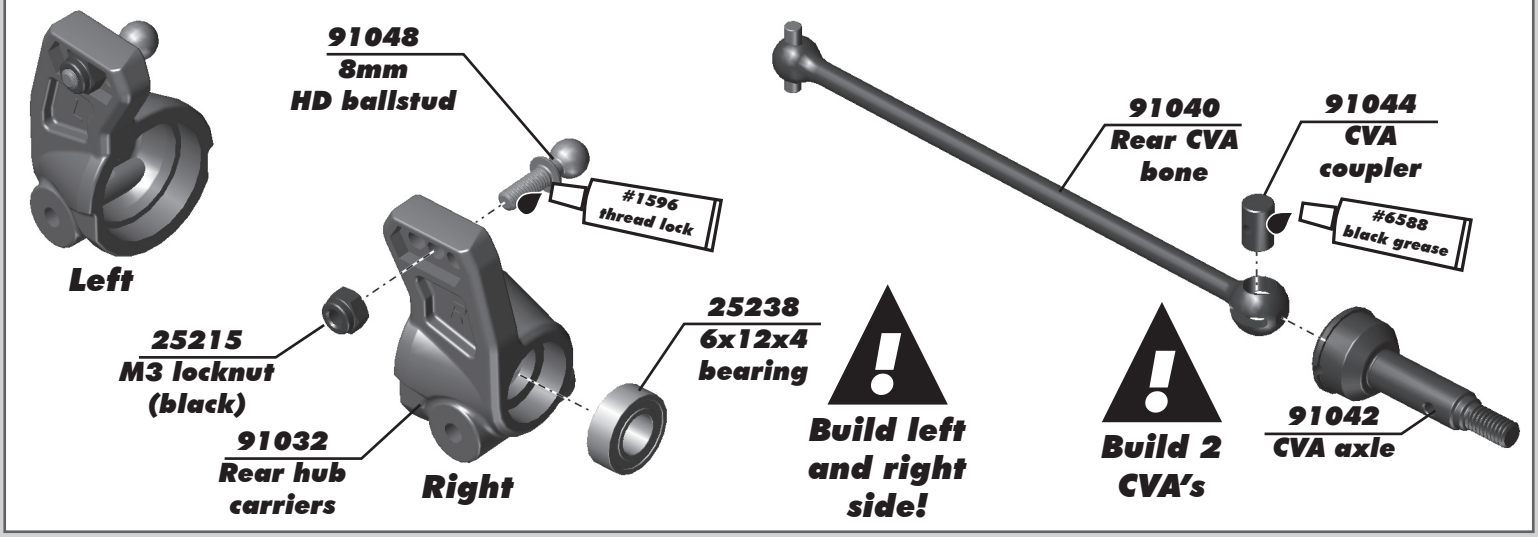

:: Rear Suspension Assembly (cont.) - Bag H-HH

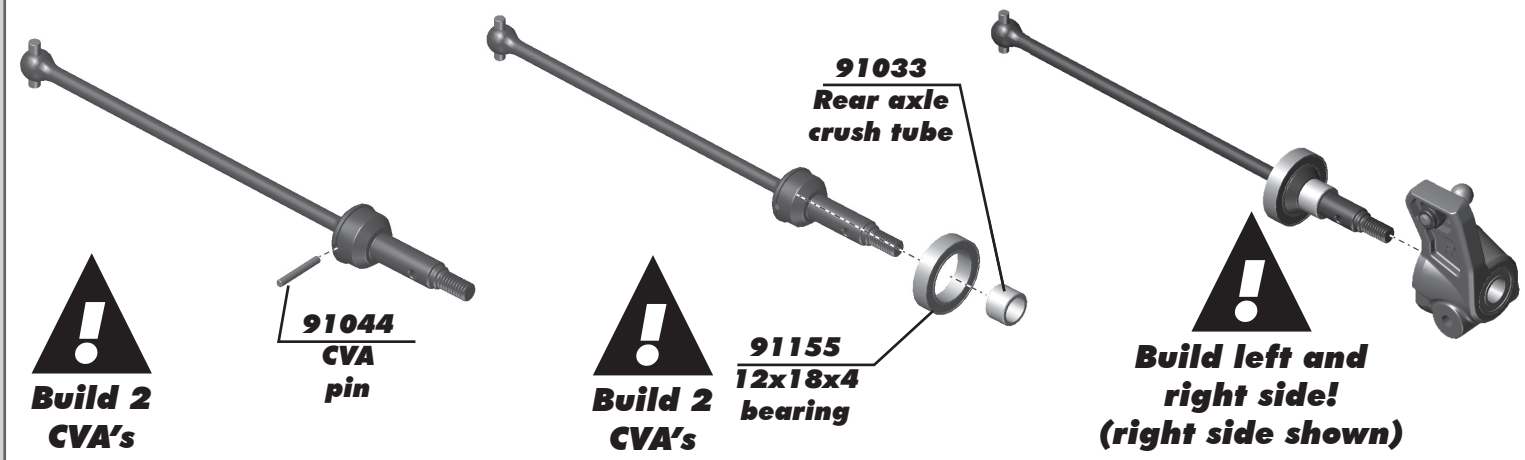

:: Rear Suspension Assembly (cont.) - Bag H-HH

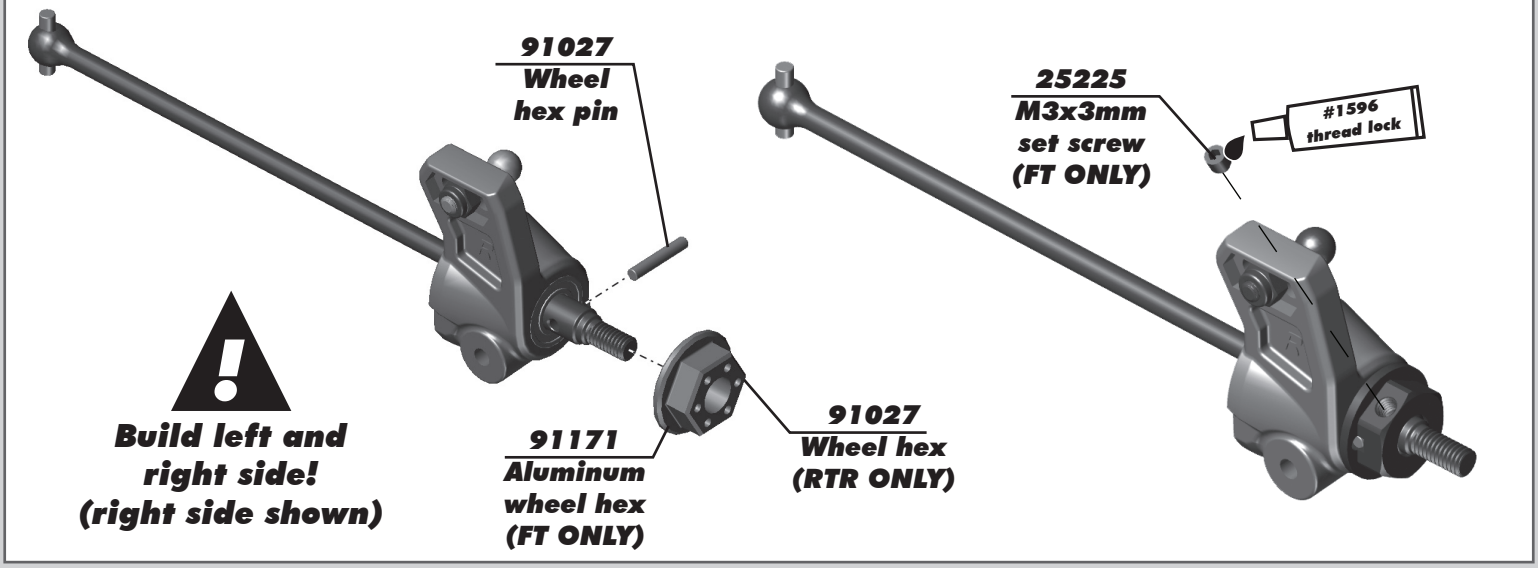

:: Rear Suspension Assembly (cont.) - Bag H-HH

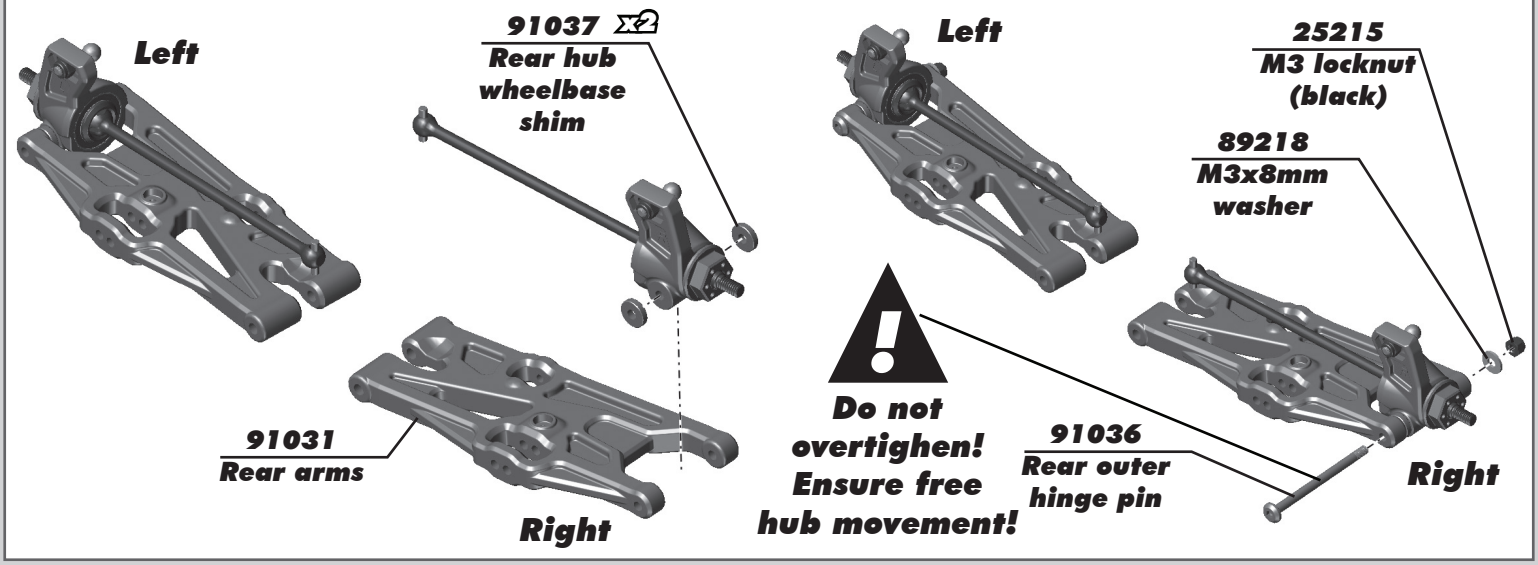

:: Rear Suspension Assembly (cont.) - Bag H-HH

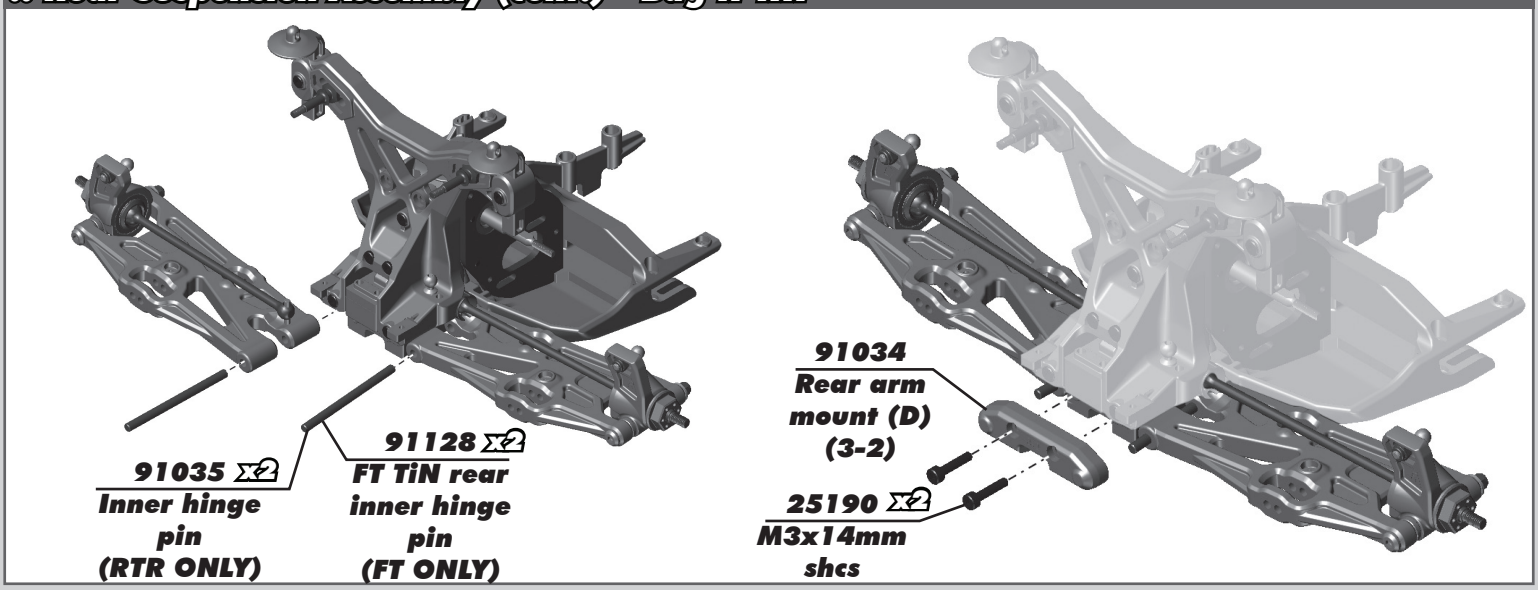

:: Rear Suspension Assembly (cont.) - Bag H-HH

Rear Camber Link (right side shown)

Note the orientation of the ballcups! Build a left and right side!

Orient the notch to the left throughout the car. It indicates which end has the left hand threads!

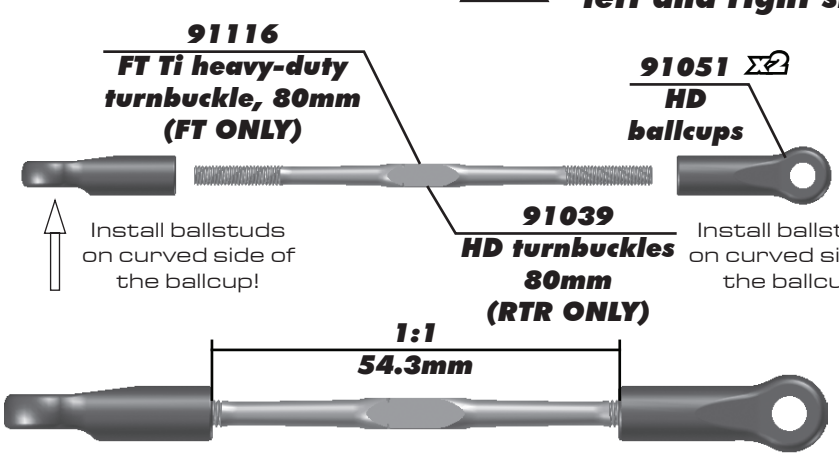

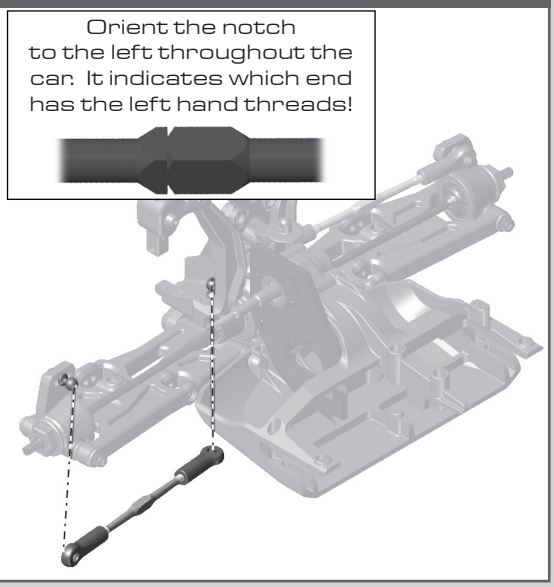

:: Front Swaybar Assembly - Bag HH-HH

Install socket joint and pivot ball through the larger hole side of the link.

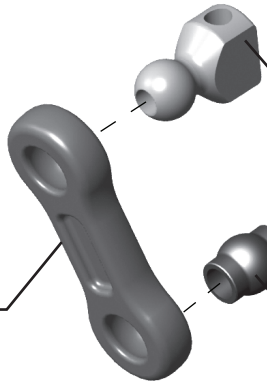

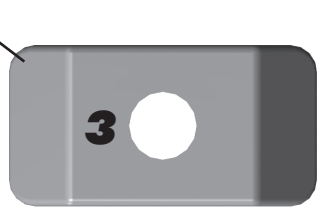

Build two front swaybar mounts with the short socket joint

:: Front Swaybar Assembly (cont.) - Bag HH-HH

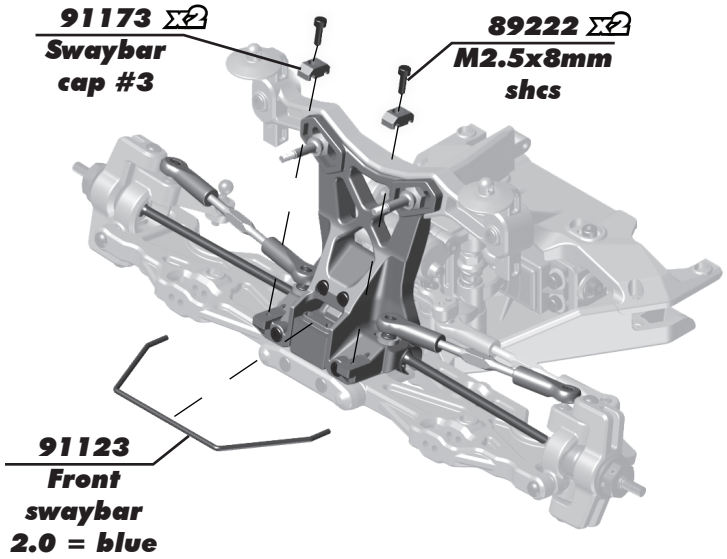

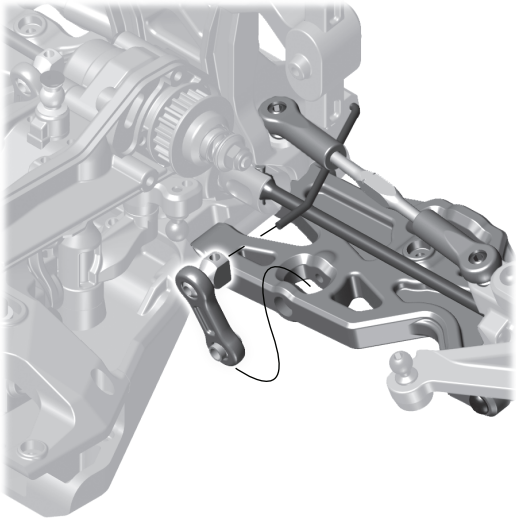

:: Front Swaybar Assembly (cont.) - Bag HH-HH

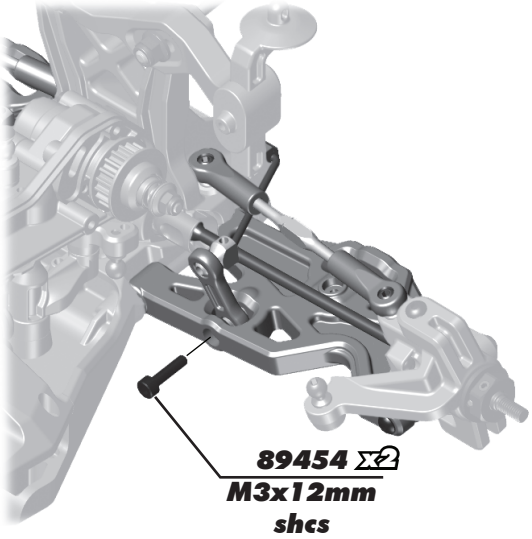

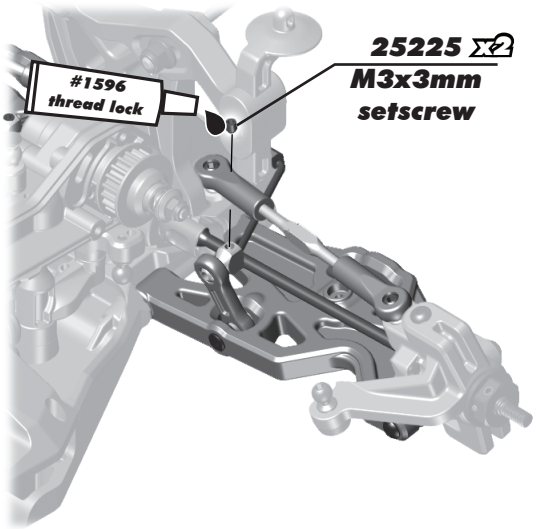

:: Rear Swaybar Assembly - Bag HH-HH

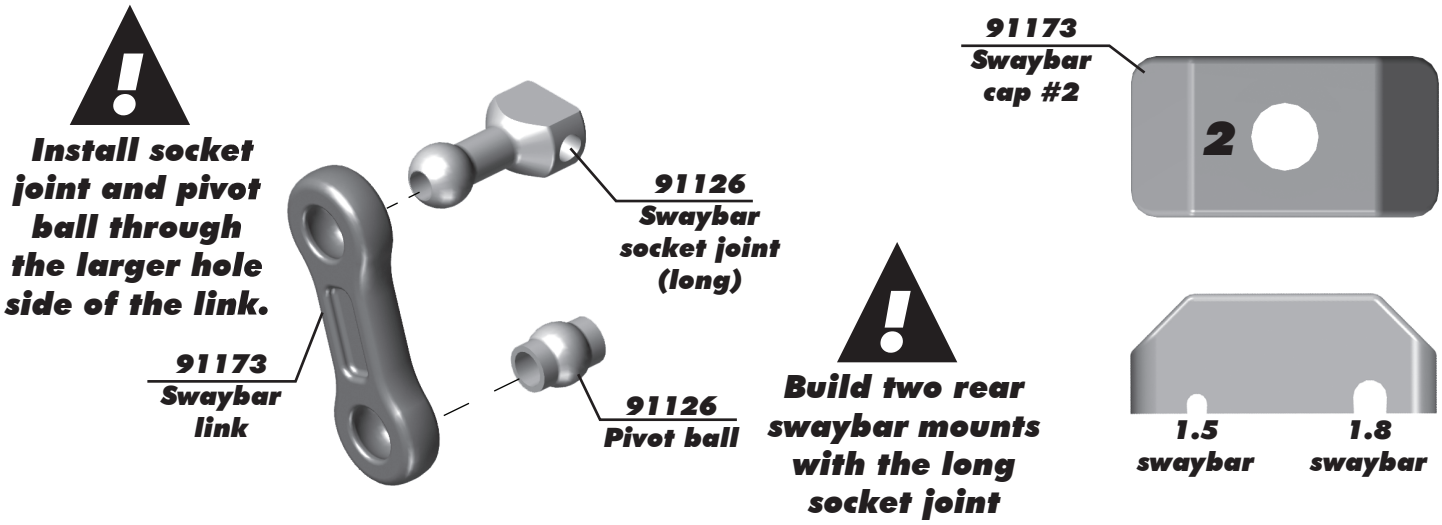

:: Rear Swaybar Assembly (cont.) - Bag HH-HH

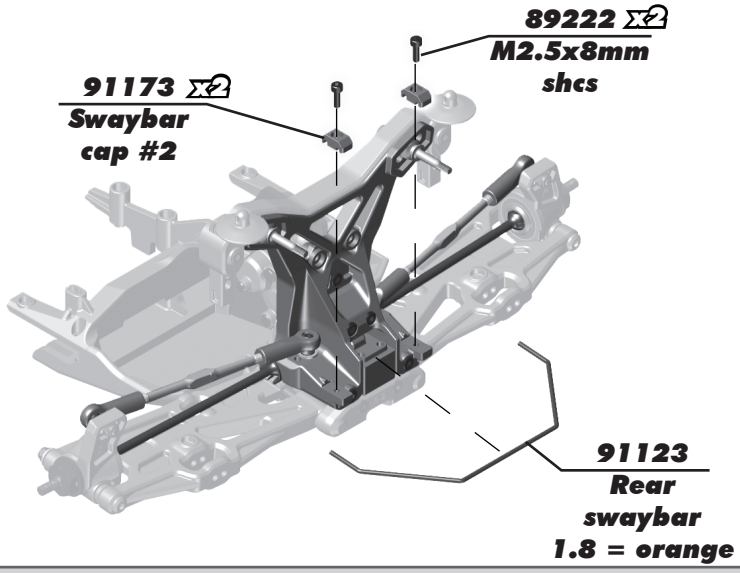

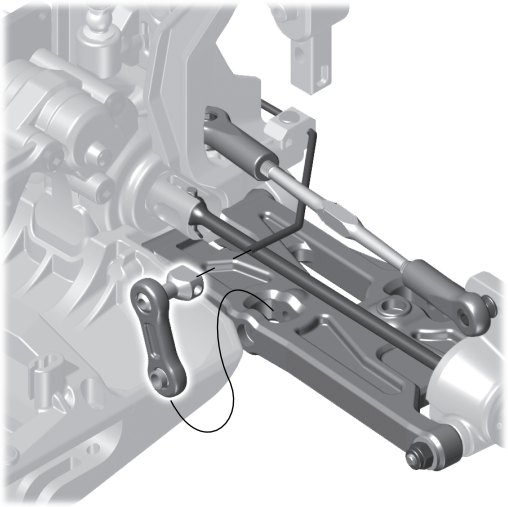

:: Rear Swaybar Assembly (cont.) - Bag HH-HH

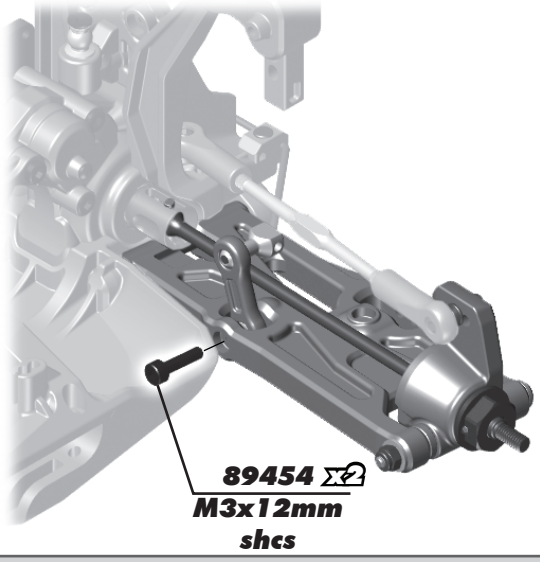

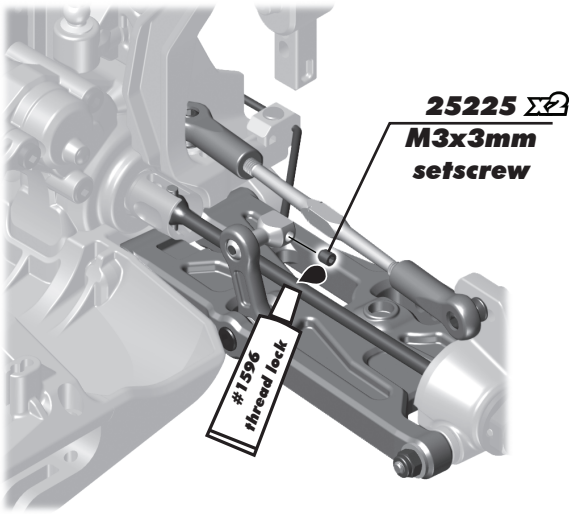

:: Shocks Assembly - Bag I

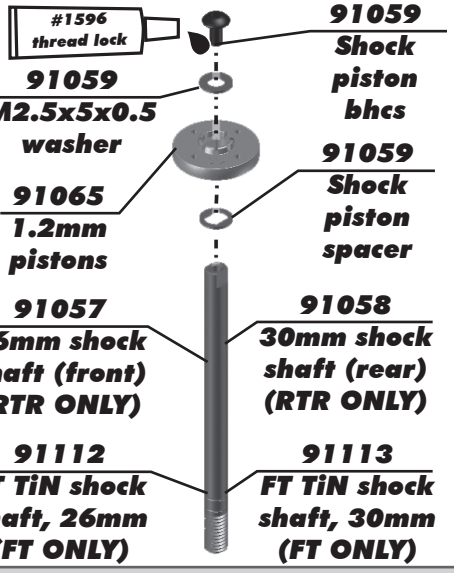

Install the shock piston with the taper side pointed down (see below)

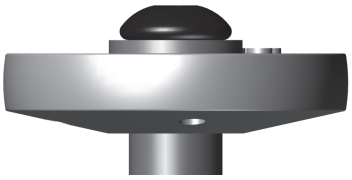

Install the shock cartridge seal tube with the tapered side pointed to the top! (see below)

:: Shocks Assembly (cont.) - Bag I

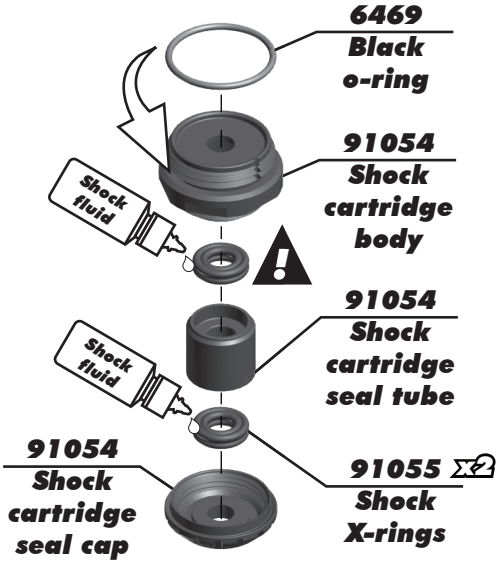

Factory Team Tip:

Use only the upper x-ring for less drag.

:: Shocks Assembly (cont.) - Bag I

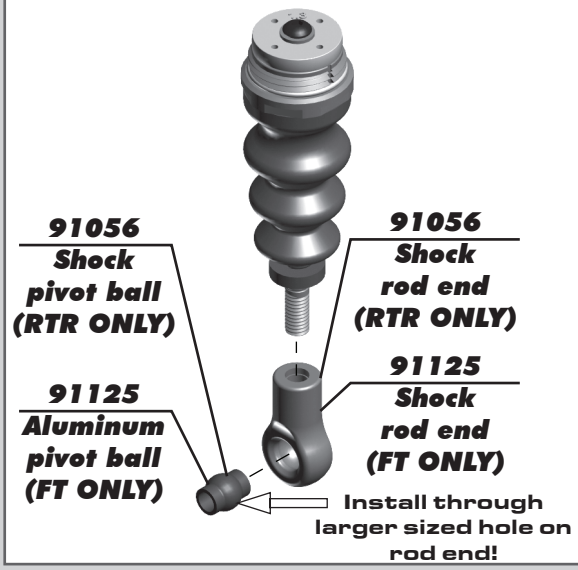

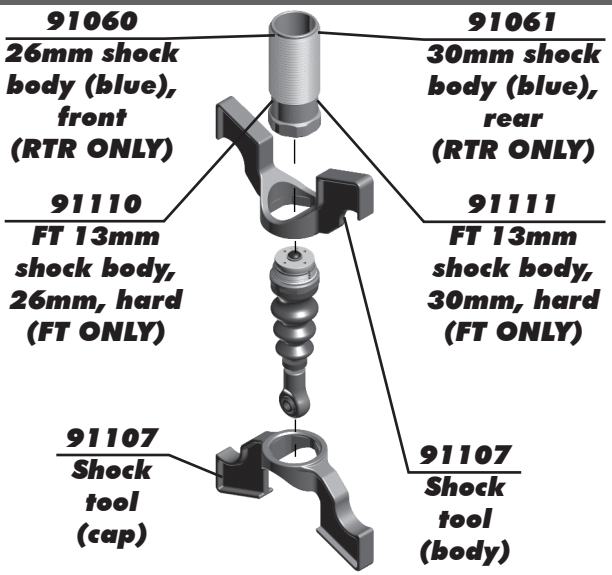

:: Shocks Assembly (cont.) - Bag I "Bladder Style Setup"

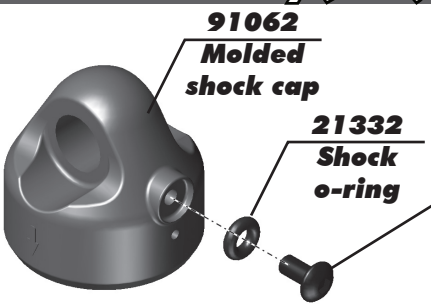

Do not overtighten!

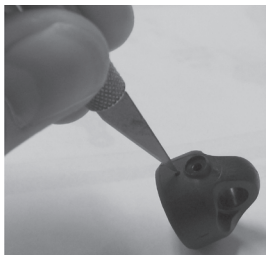

Use a hobby knife to clear out the bleeder hole in each shock cap!

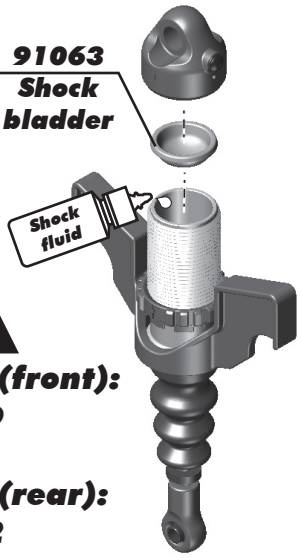

Shock Fluid (front): 35wt #5429

Shock Fluid (rear): 30wt #5422

**** Shock Bleeding Steps:***

1. Fill shock body 3/4 full with silicone shock fluid
2. Slowly move the shock shaft up and down to remove any air bubbles.
3. Wait for the air bubbles to surface, then compress the shock shaft half way.
4. Fill the shock within 0.5mm from the top with silicone shock fluid.
5. Gently seat the bladder into the shock cap
6. Thread the shock cap onto the shock, excess fluid will exit thru the bleed hole.
7. Tighten cap by hand, and pump the shock up and down to check for leaks or air bubbles.
8. If the shock is leaking, tighten the cartridge or shock cap and retry.
9. If the shock has air bubbles, remove the cap and start at step 2.

Note: This setting is known as half rebound.

:: Shocks Assembly (cont.) - Bag I "Emulsion Style Setup"

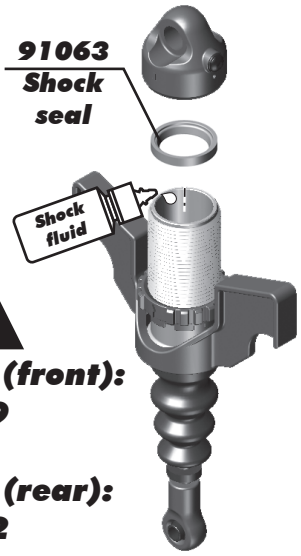

Shock Fluid (front): 35wt #5429

Shock Fluid (rear): 30wt #5422

**** Shock Bleeding Steps:***

1. Before assembly, install bleeder screw and thread it 1-2 turns into the shock caps. This will make installation easier when you are bleeding your shocks.
2. Pull shock shaft down.
3. Fill shock body 3/4 full with silicone shock fluid.
4. Slowly move the shock shaft up and down to remove air from under the piston.
5. Wait for bubbles to come to surface.
6. Fill shock body to top with silicone shock fluid.
7. Place a drop of oil in the cap and on cap threads.
8. Install cap (without bleed screw) and tighten completely.
9. Slowly compress shaft all the way to bleed excess silicone shock fluid out the hole in the cap (use rag around shock to catch excess fluid).
10. Install 2x4mm button head cap screw until snug while shaft is fully compressed (recommend using a high quality 1.5mm wrench such as Factory Team #1544).

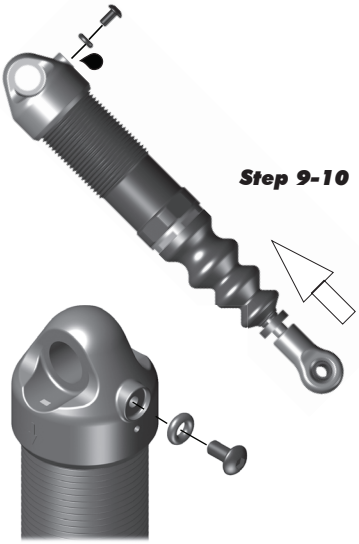

:: Shocks Assembly (cont.) - Bag I

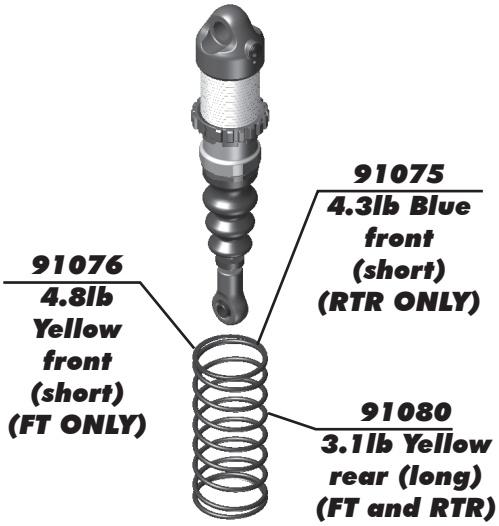

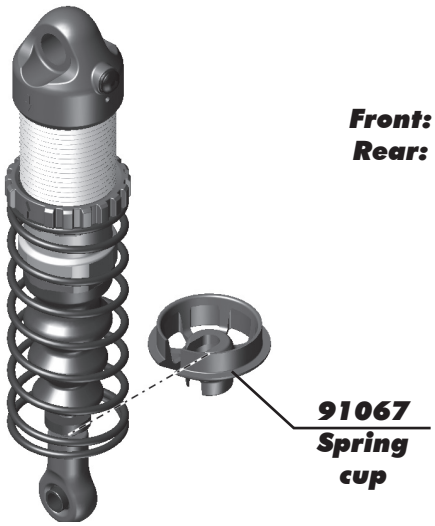

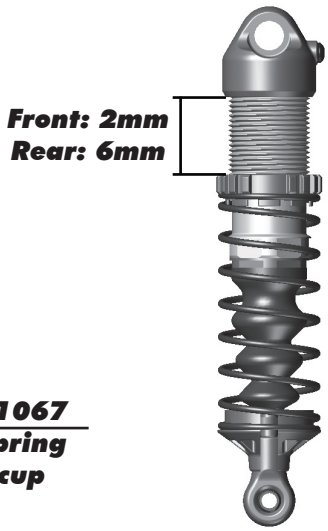

Build two front and two rear shocks!

:: Shocks Assembly (cont.) - Bag I

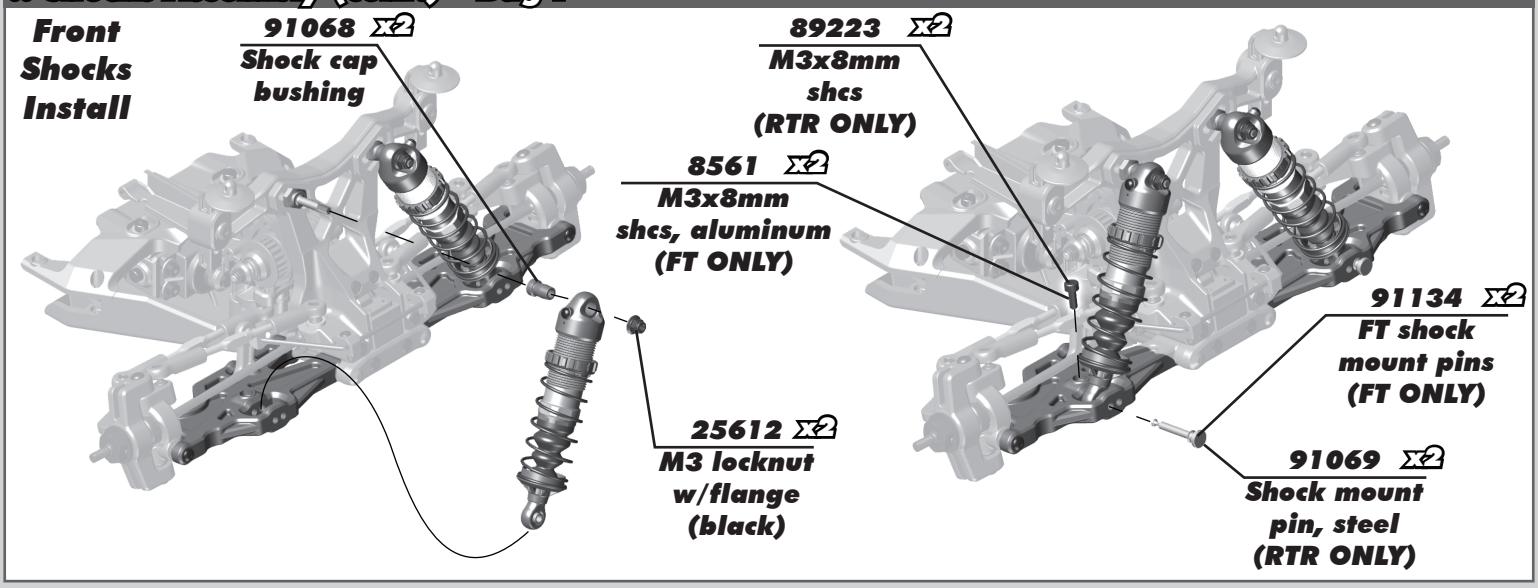

:: Shocks Assembly (cont.) - Bag I

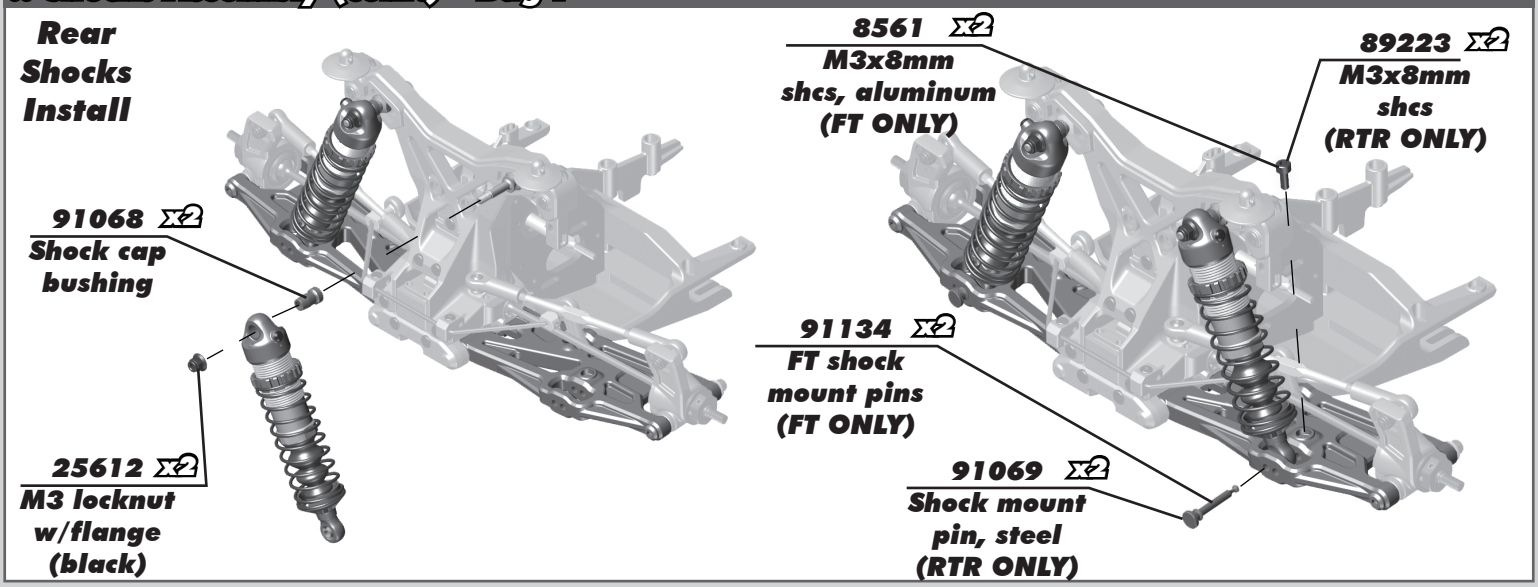

:: Chassis Assembly - Bag J

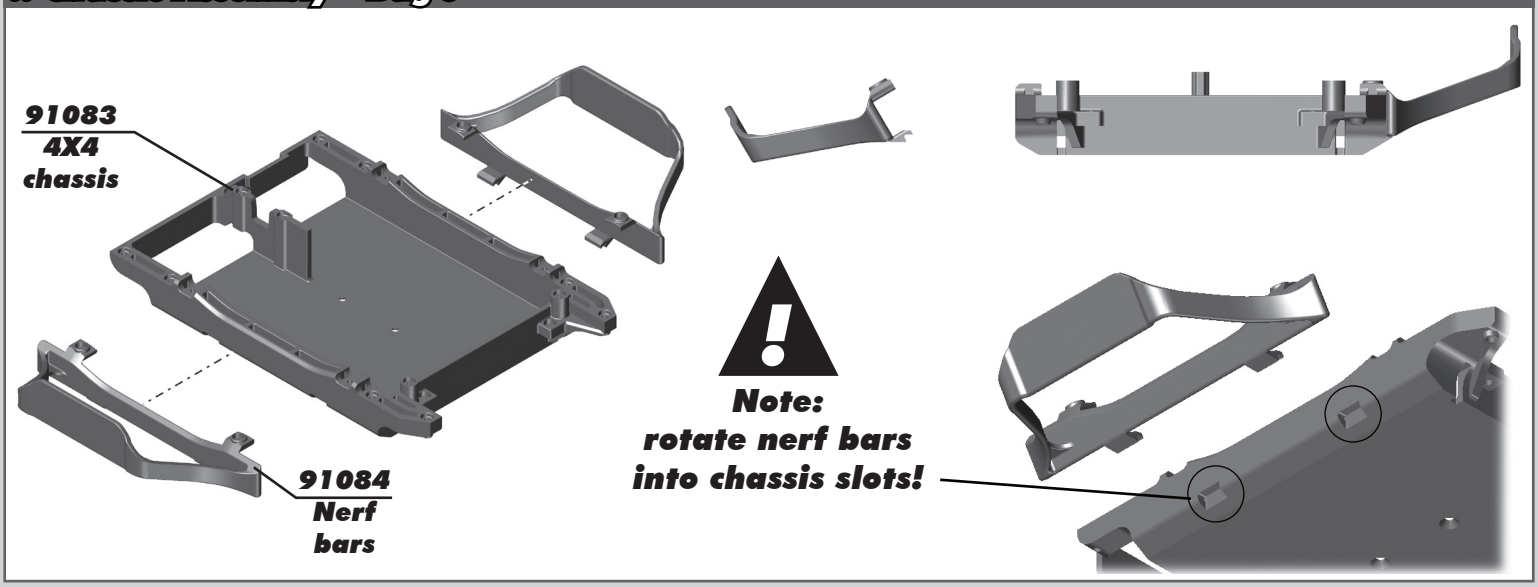

:: Chassis Assembly (cont.) - Bag J

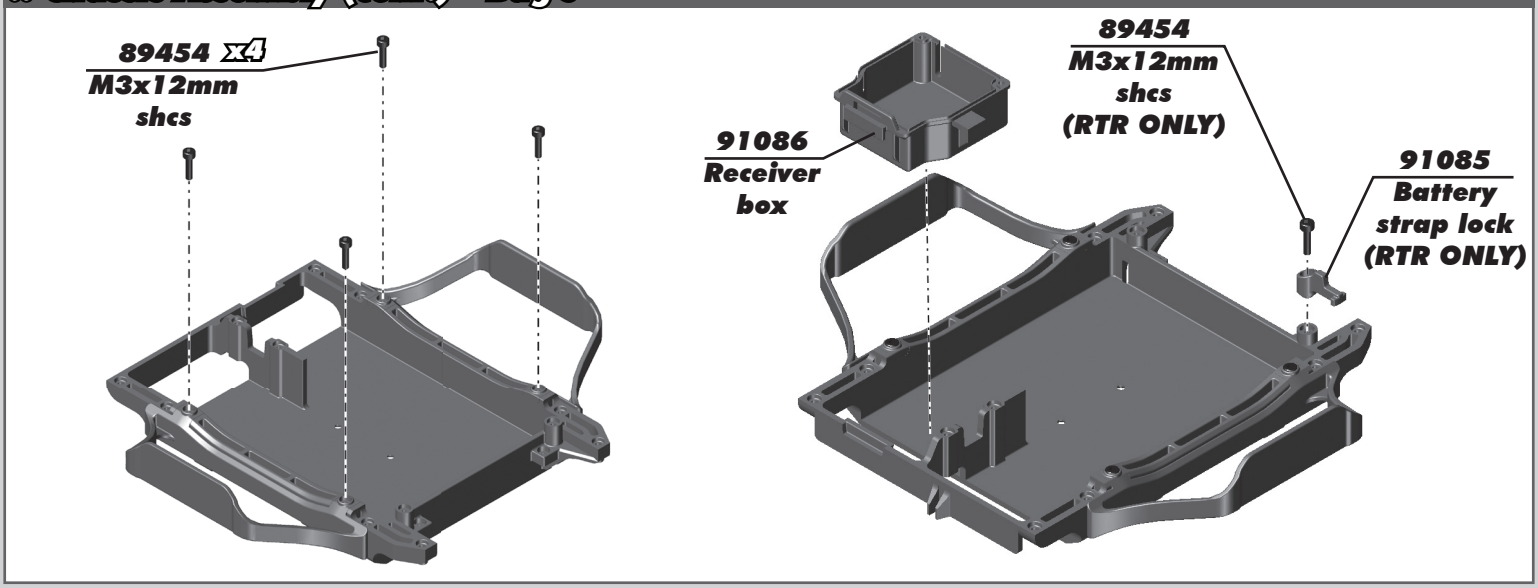

:: Chassis Assembly (cont.) - Bag J

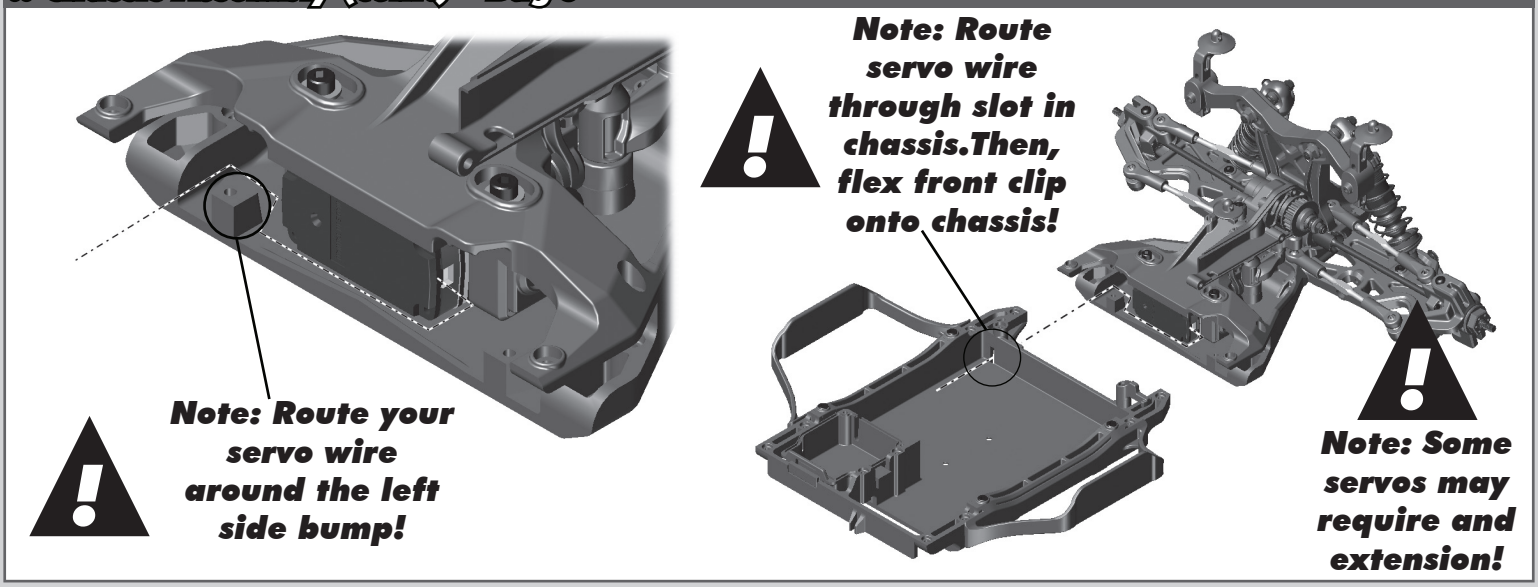

:: Chassis Assembly (cont.) - Bag J

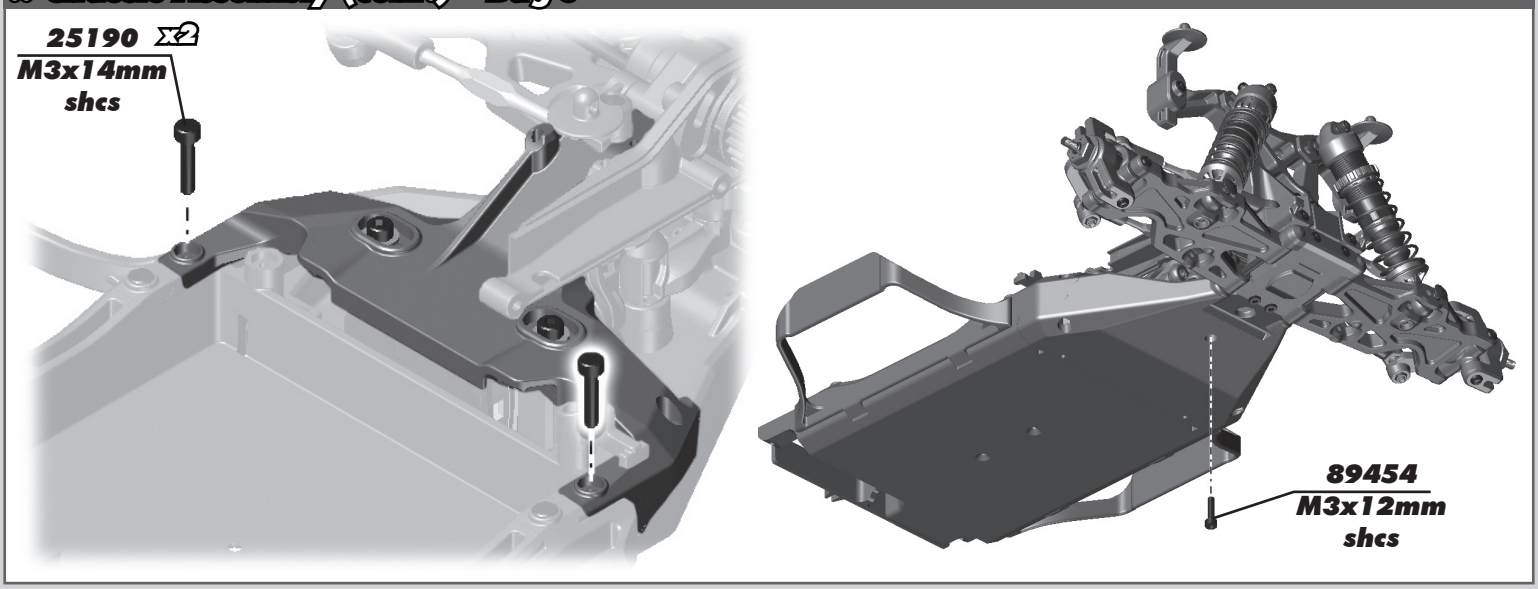

:: Chassis Assembly (cont.) - Bag J

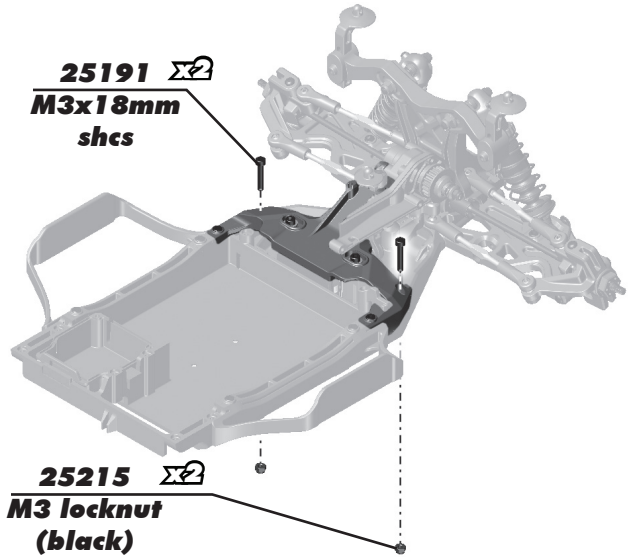

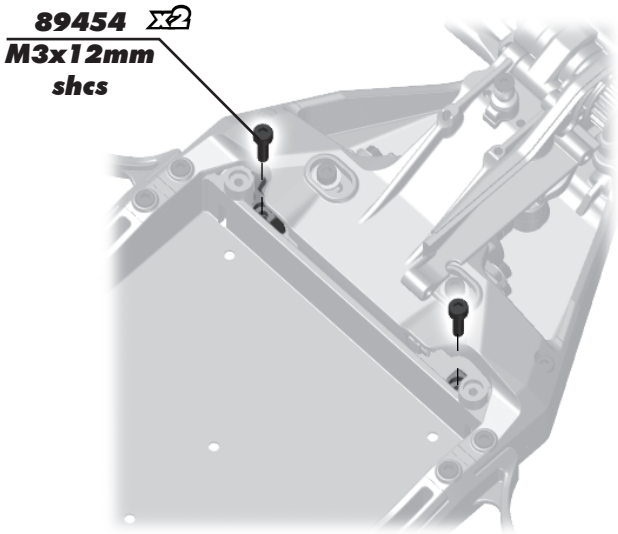

:: Chassis Assembly (cont.) - Bag J

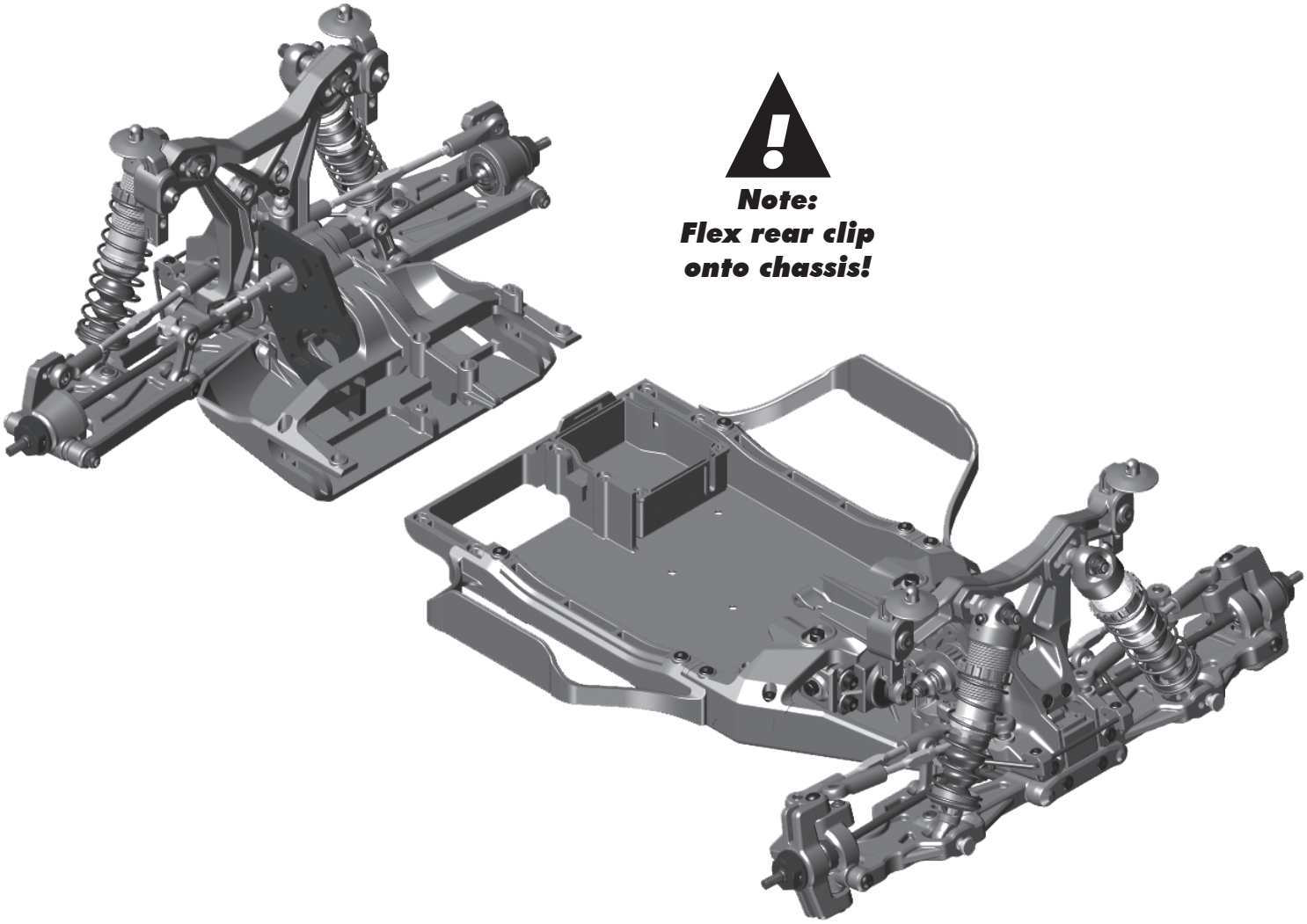

:: Chassis Assembly (cont.) - Bag J

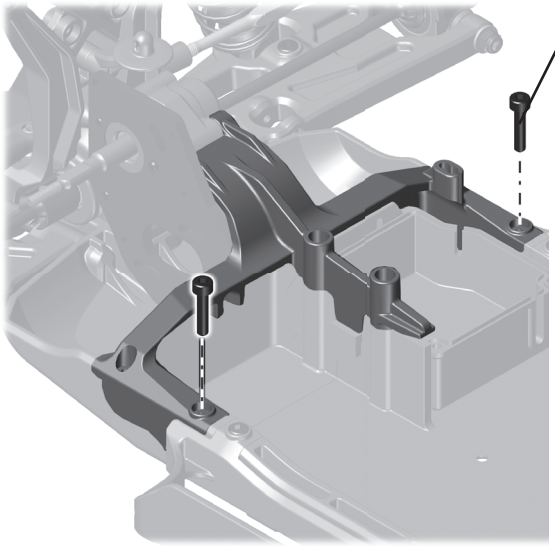

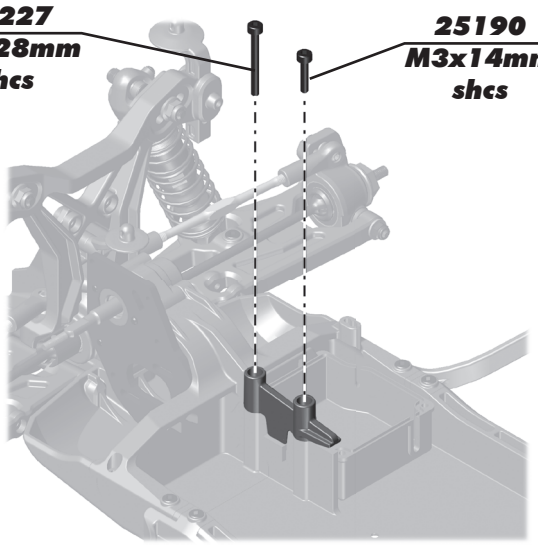

:: Chassis Assembly (cont.) - Bag J

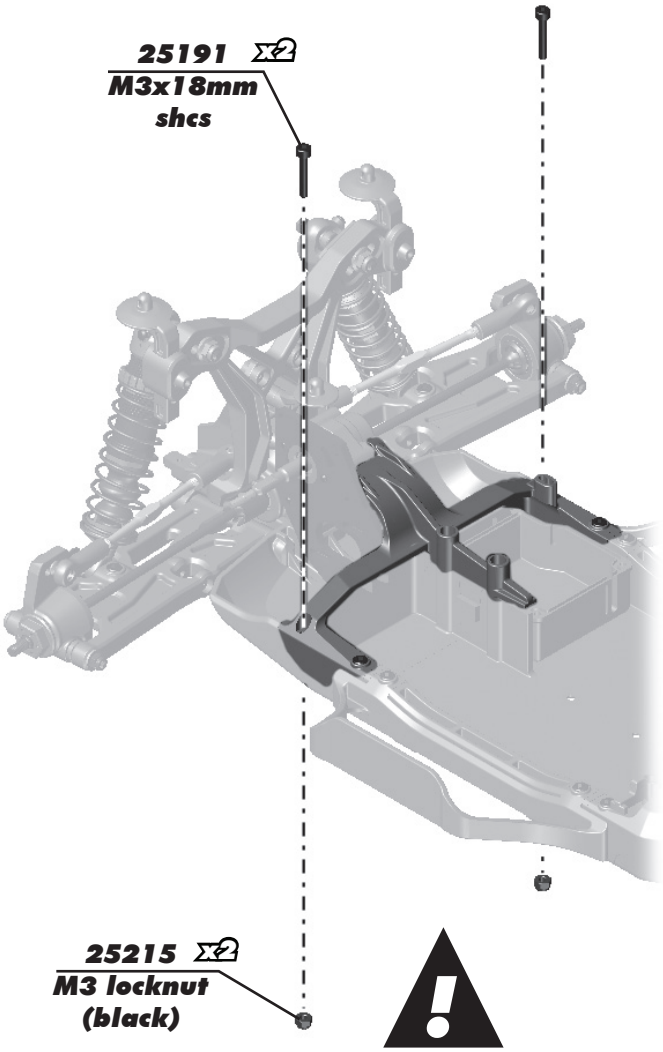

Top view

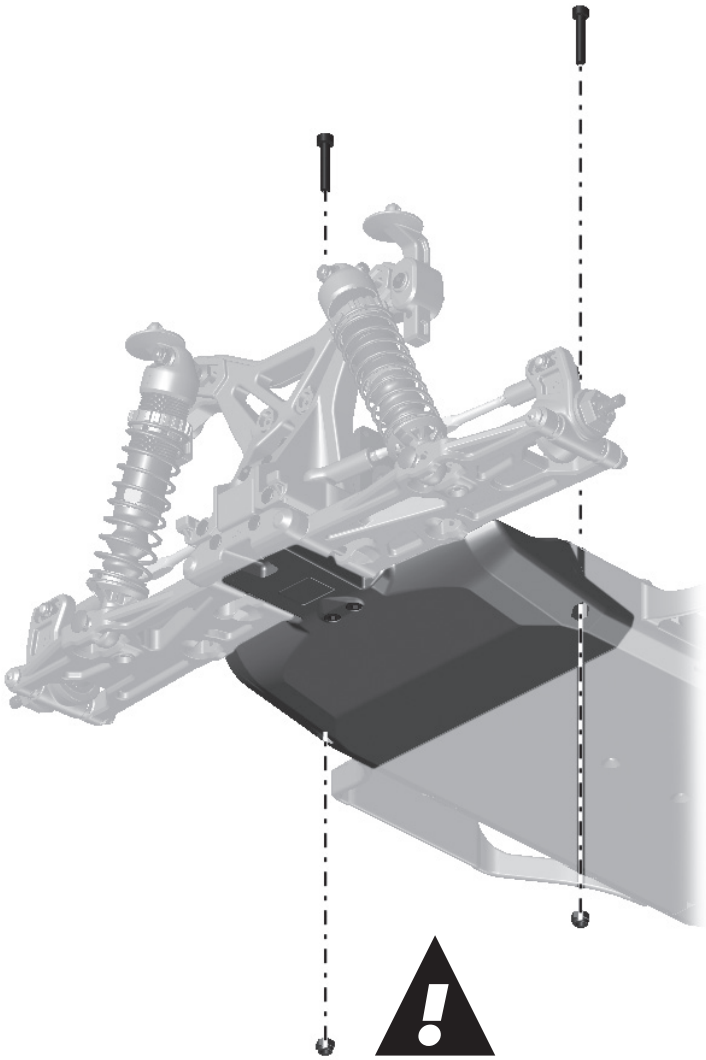

Bottom view

:: Belt, Tensioners, Spur Gear, and Covers Assembly - Bag K-KK

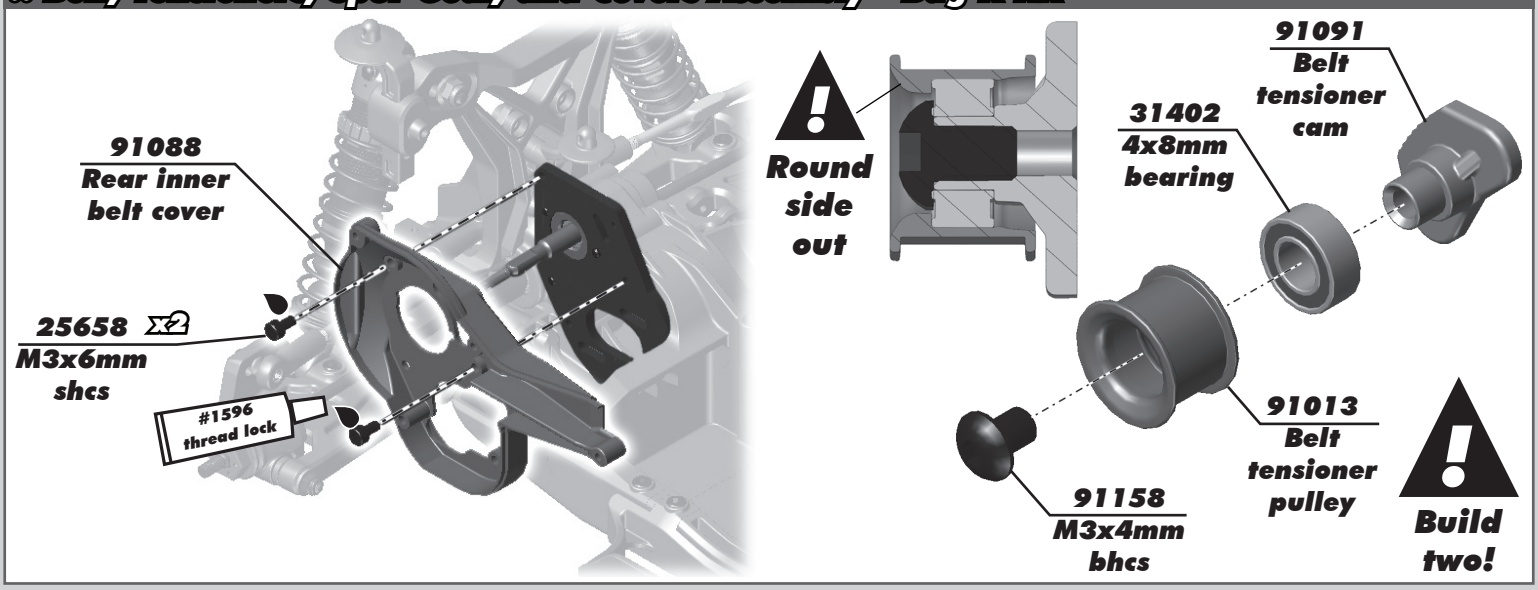

:: Belt, Tensioners, Spur Gear, and Covers Assembly (cont.) - Bag K-KK

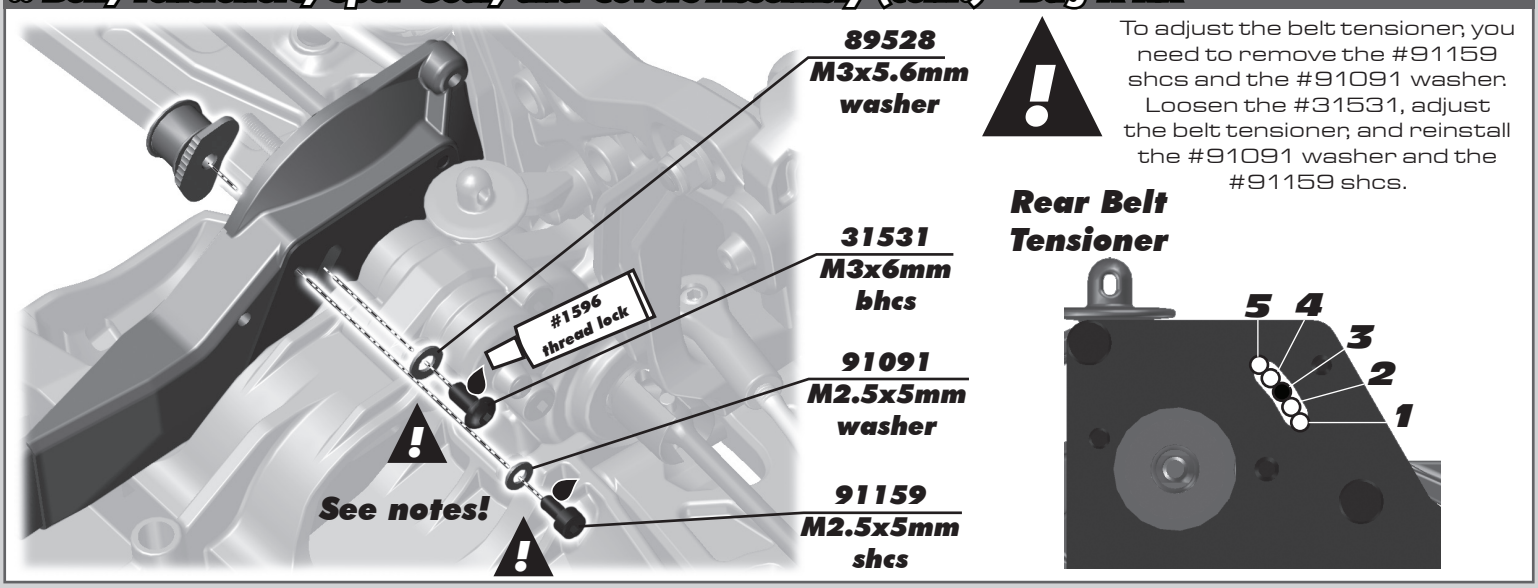

:: Belt, Tensioners, Spur Gear, and Covers Assembly (cont.) - Bag K-KK

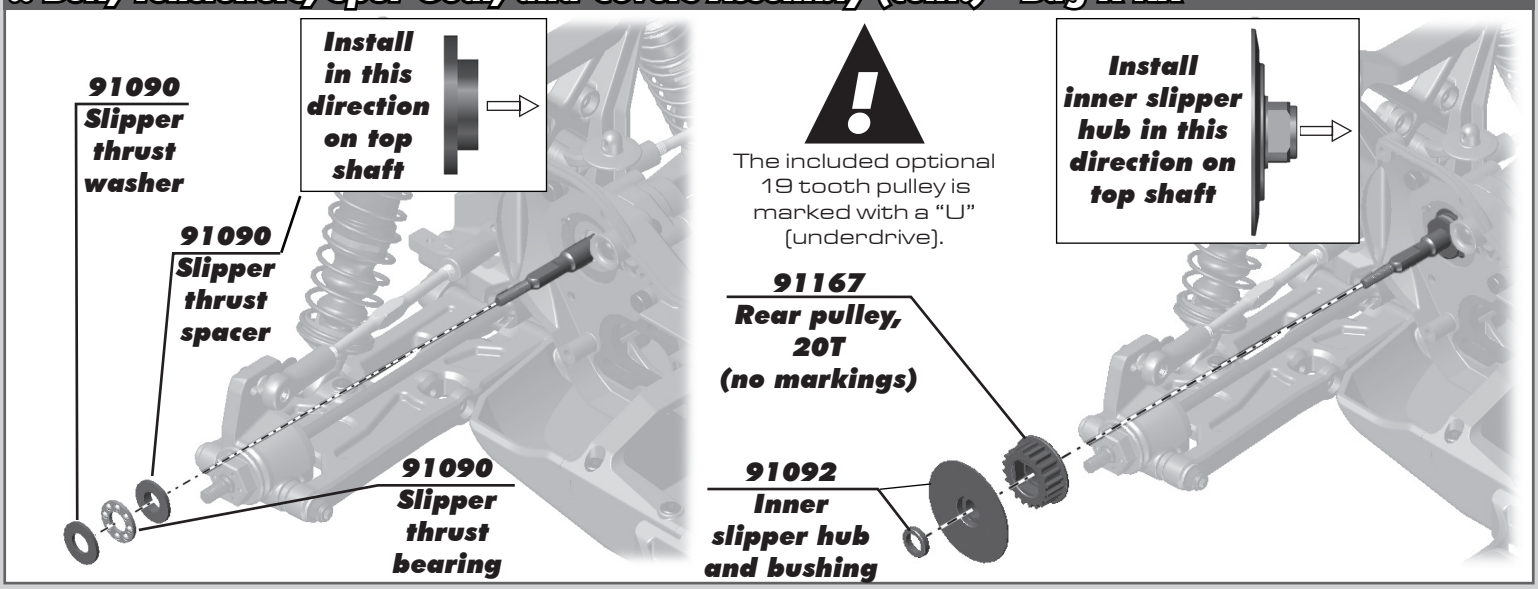

:: Belt, Tensioners, Spur Gear, and Covers Assembly (cont.) - Bag K-KK

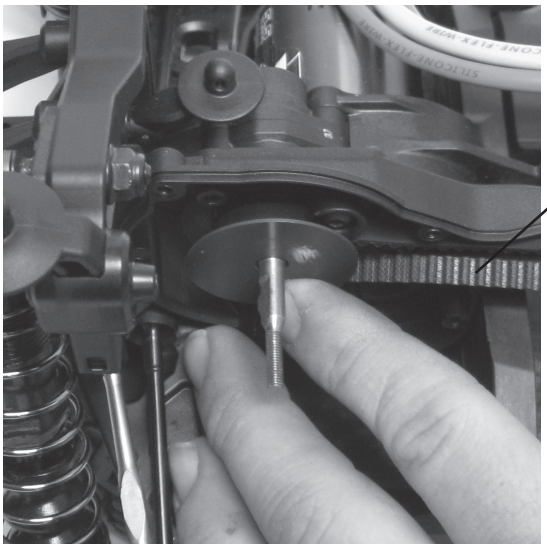

91093
4X4 drive belt

Install the belt between the rear pulley and the rear belt tensioner. Then slide the belt over the front pulley. Ensure free rotation!

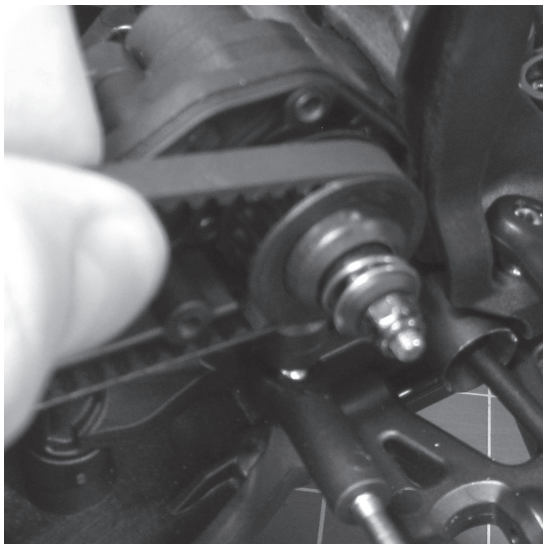

:: Belt, Tensioners, Spur Gear, and Covers Assembly (cont.) - Bag K-KK

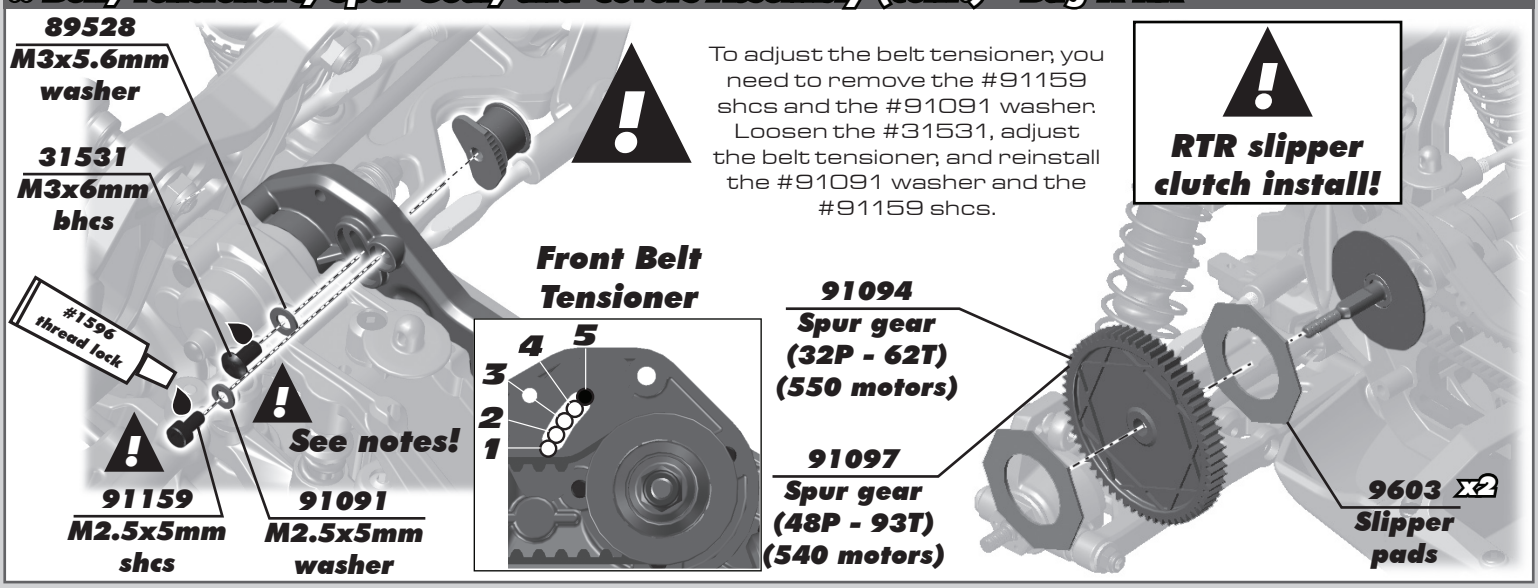

To adjust the belt tensioner, you need to remove the #91159 shcs and the #91091 washer. Loosen the #31531, adjust the belt tensioner, and reinstall the #91091 washer and the #91159 shcs.

RTR slipper clutch install!

:: Belt, Tensioners, Spur Gear, and Covers Assembly (cont.) - Bag K-KK

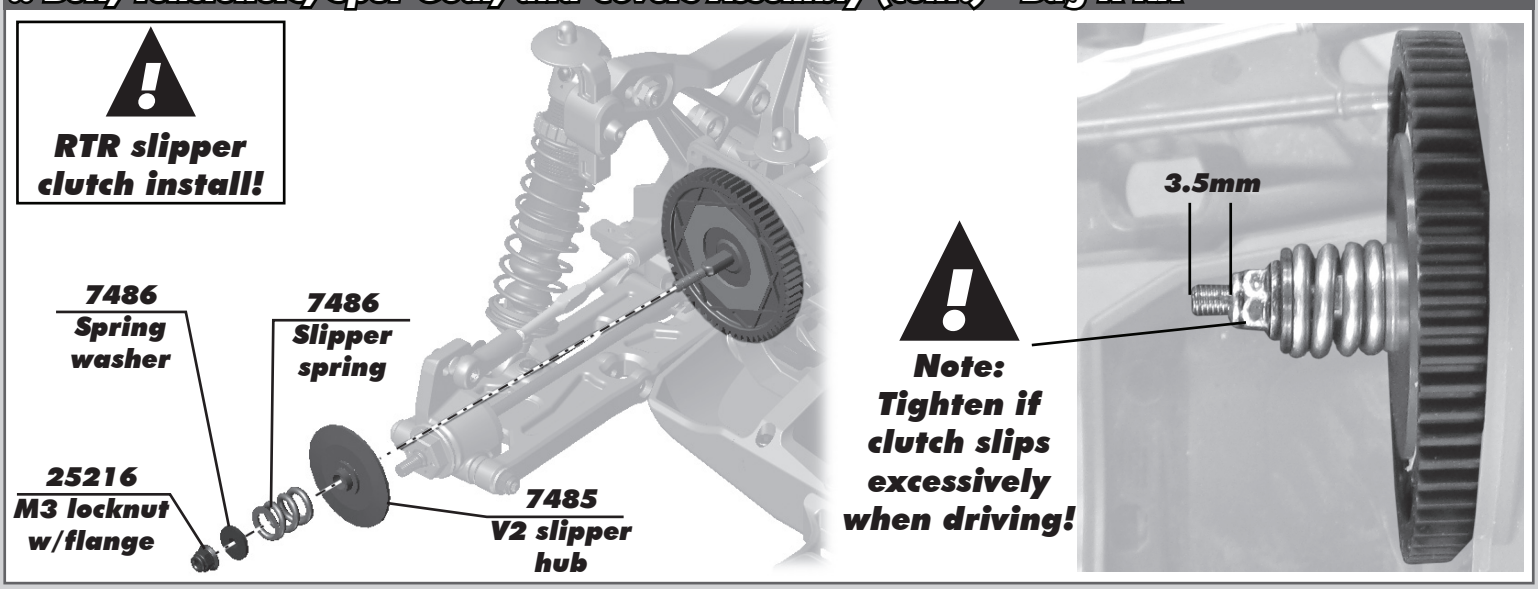

:: Belt, Tensioners, Spur Gear, and Covers Assembly (cont.) - Bag K-KK

FT VTS slipper clutch install!

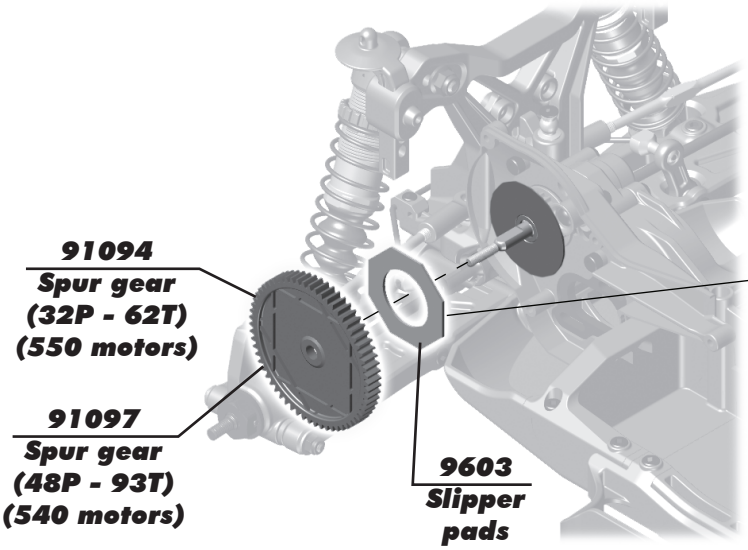

"CAUTION"
Ensure that the slipper pad behind the spur gear is properly installed before tightening up the new VTS slipper assembly!

:: Belt, Tensioners, Spur Gear, and Covers Assembly (cont.) - Bag K-KK

FT VTS slipper clutch install!

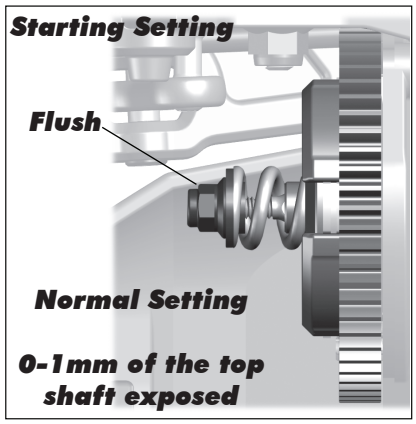

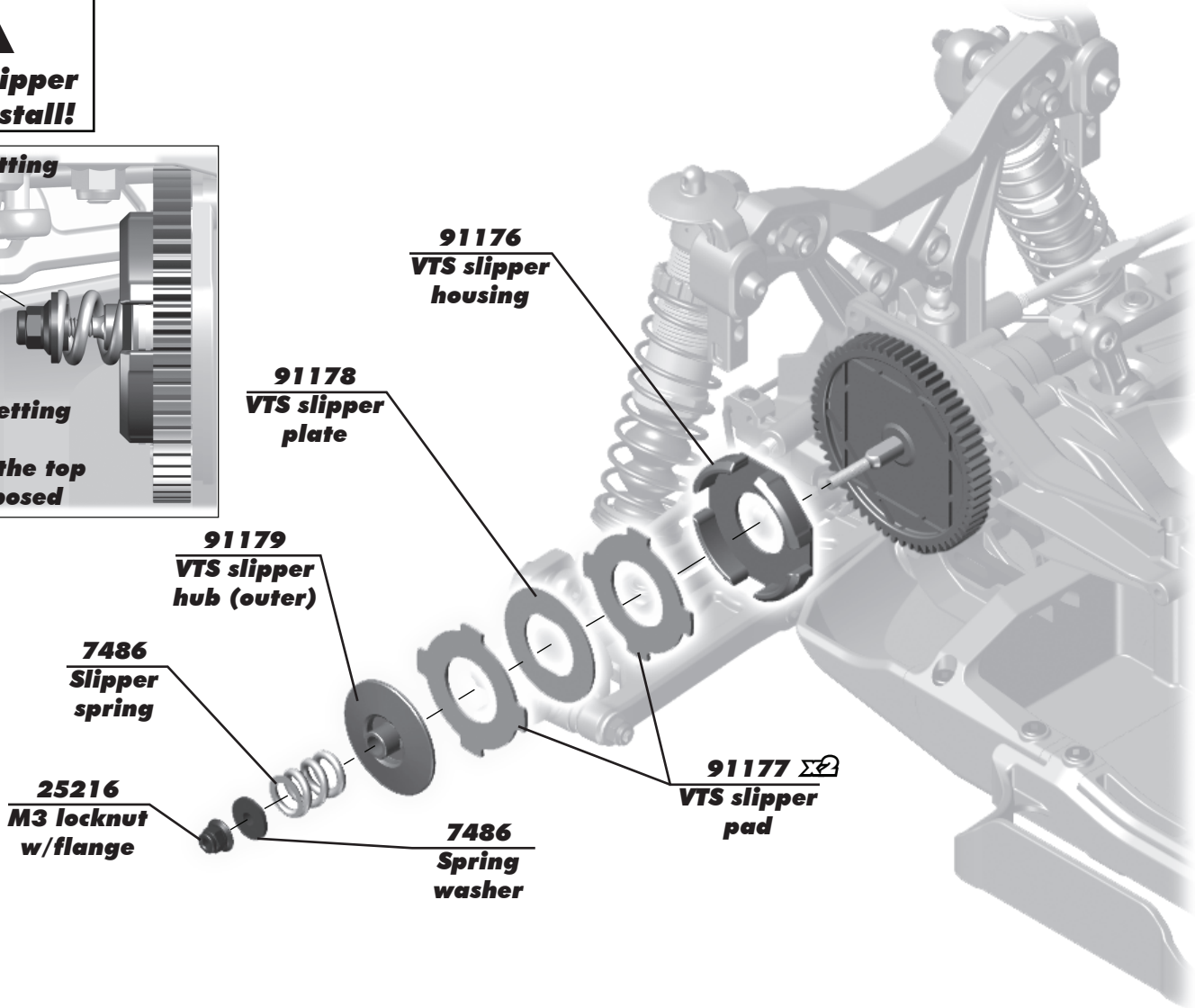

:: Belt, Tensioners, Spur Gear, and Covers Assembly (cont.) - Bag K-KK

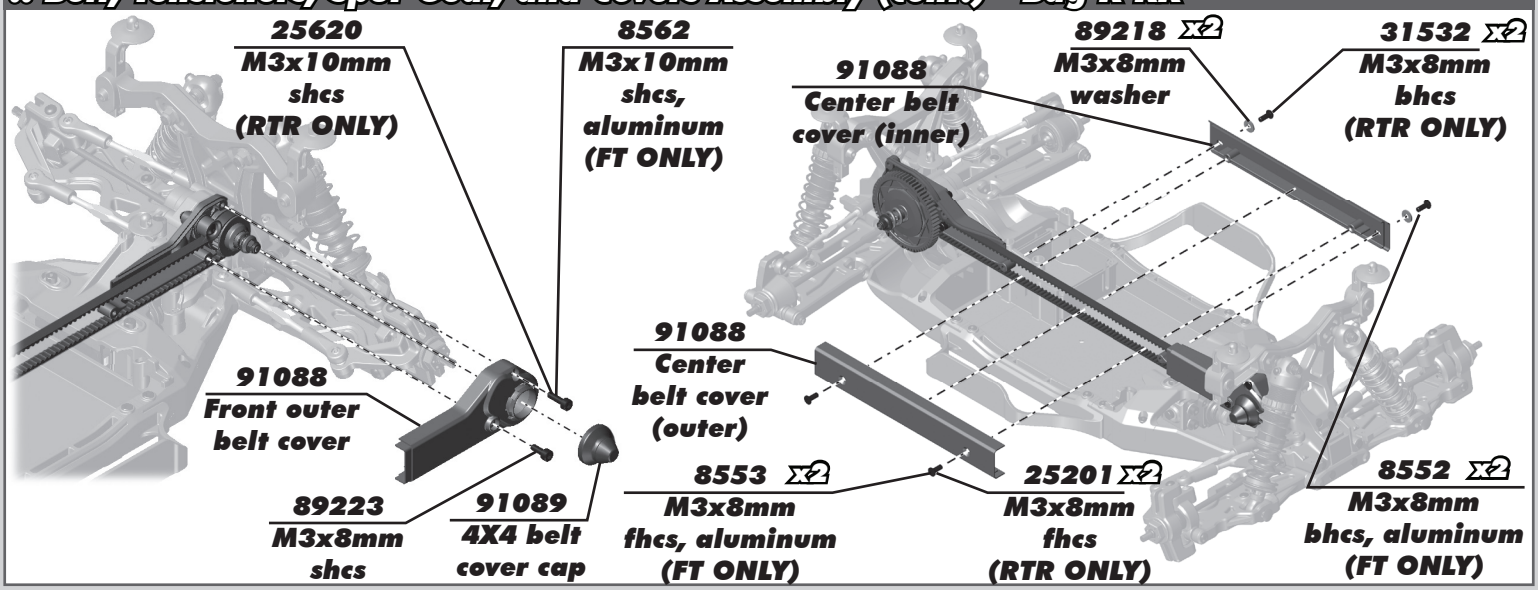

:: Electronics Installation - Bag L-LL

:: Electronics Installation (cont.) - Bag L-LL

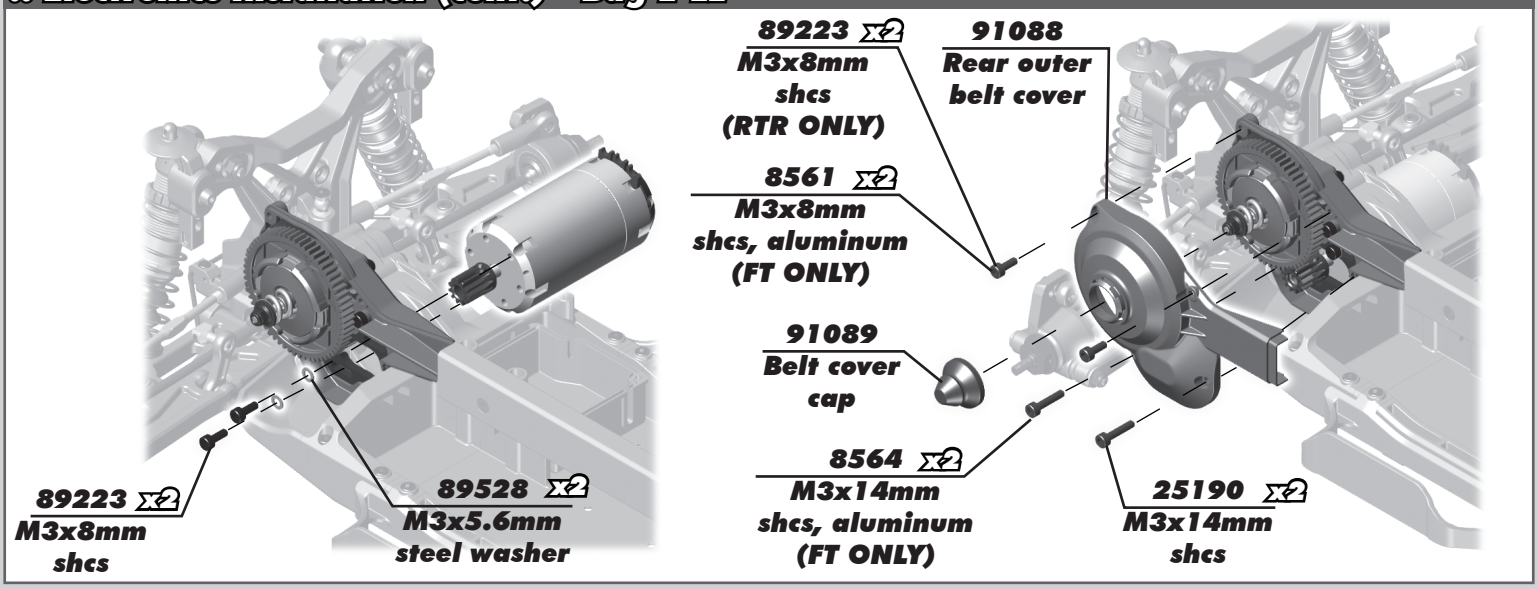

:: Electronics Installation (cont.) - Bag L-LL

FT ESC install!

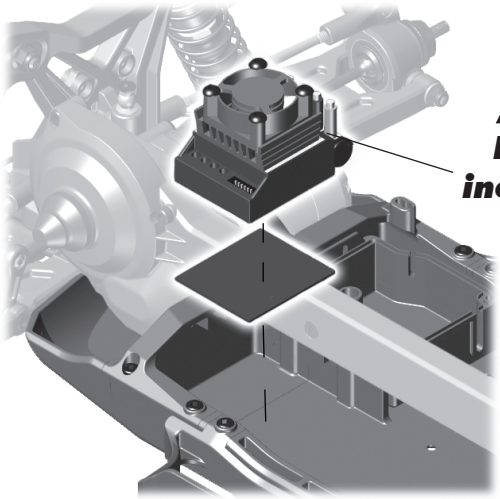

ESC not included in FT kit!

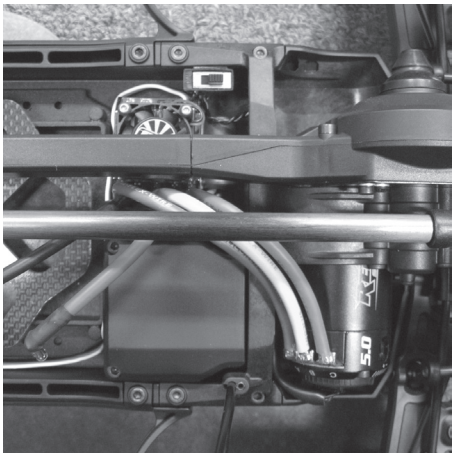

:: Electronics Installation (cont.) - Bag L-LL

RTR electronics install!

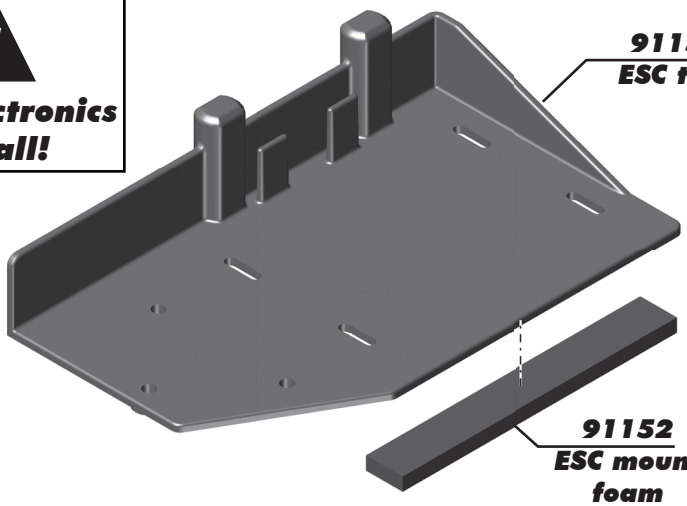

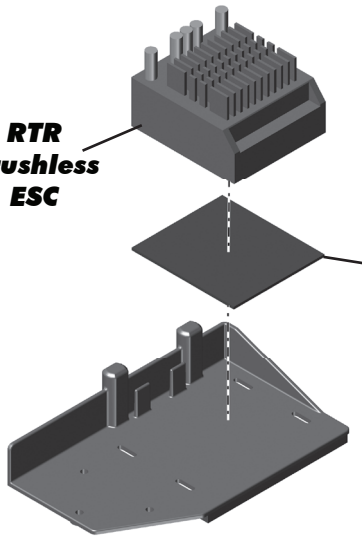

:: Electronics Installation (cont.) - Bag L-LL

RTR electronics install!

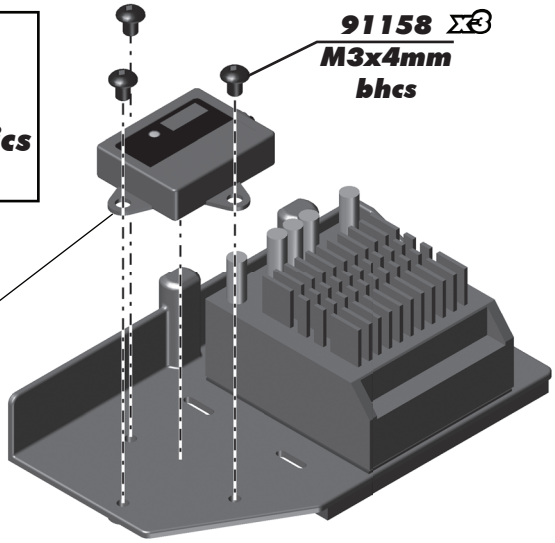

Transponder not included!

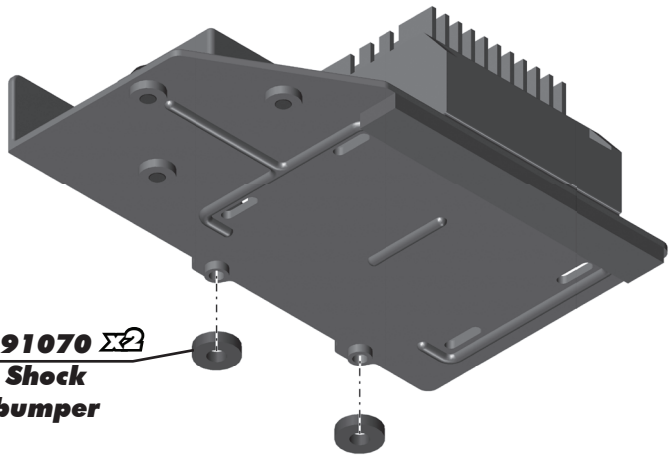

:: Electronics Installation (cont.) - Bag L-LL

RTR electronics install!

Use the optional battery tray wall if you do not wish to use the ESC tray!

91152
Battery wall

25201 x2
M3x8mm fhcs

Use the tabs on the electronics tray to route your ESC and transponder wires!

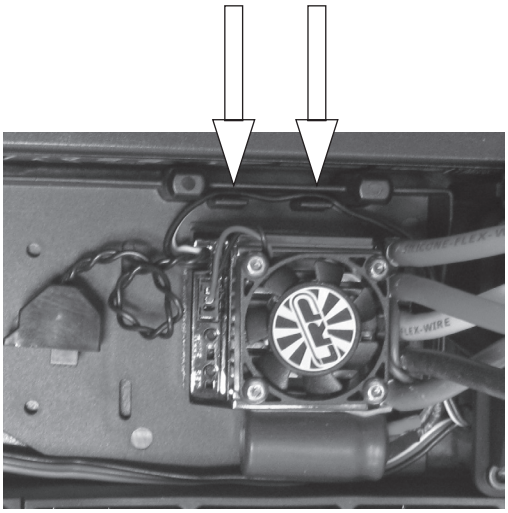

:: Electronics Installation (cont.) - Bag L-LL

91087
Receiver box seal

91152
Receiver grommet plug

Receiver grommet "plug" can be removed if you use a personal transponder!

:: Electronics Installation (cont.) - Bag L-LL

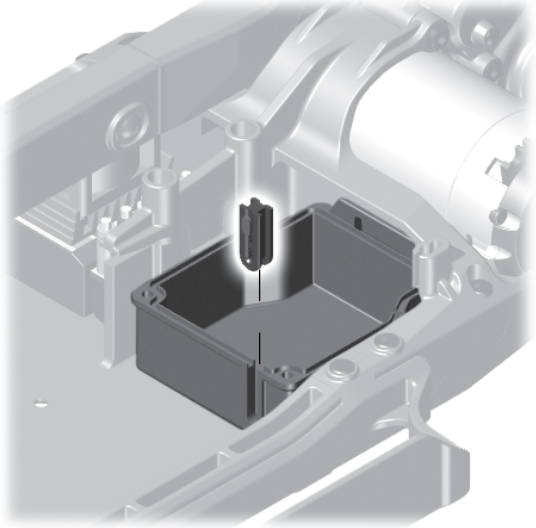

29222
XP TRS401-ss
2.4GHz 4CH
Receiver
(RTR only)

Receiver not included in FT kit!

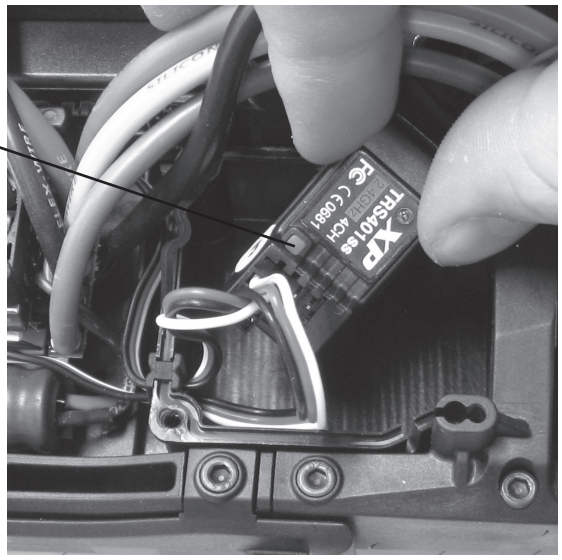

:: Electronics Installation (cont.) - Bag L-LL

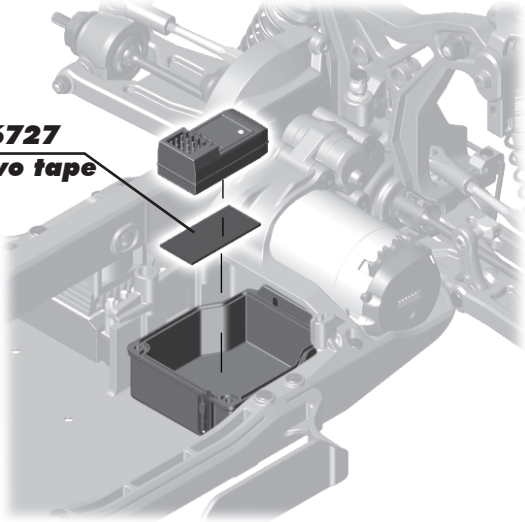

6727
Servo tape

91087
Receiver box seal (antenna)

Install antenna wire through the hole as shown!

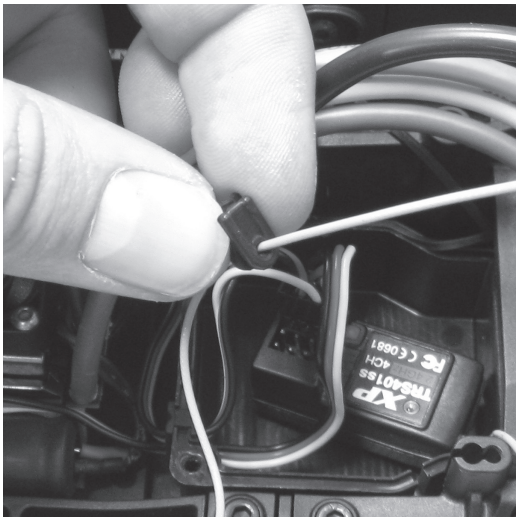

:: Electronics Installation (cont.) - Bag L-LL

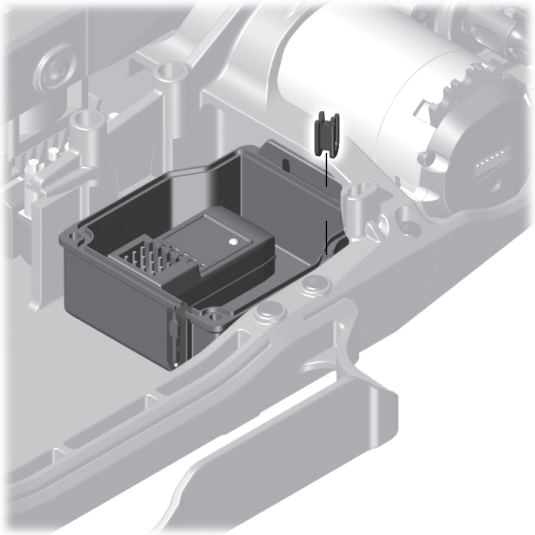

Trim the antenna "tube" to fit the amount of antenna wire that will be sticking out of the receiver box before installation!
"Do not cut the receiver antenna"

:: Electronics Installation (cont.) - Bag L-LL

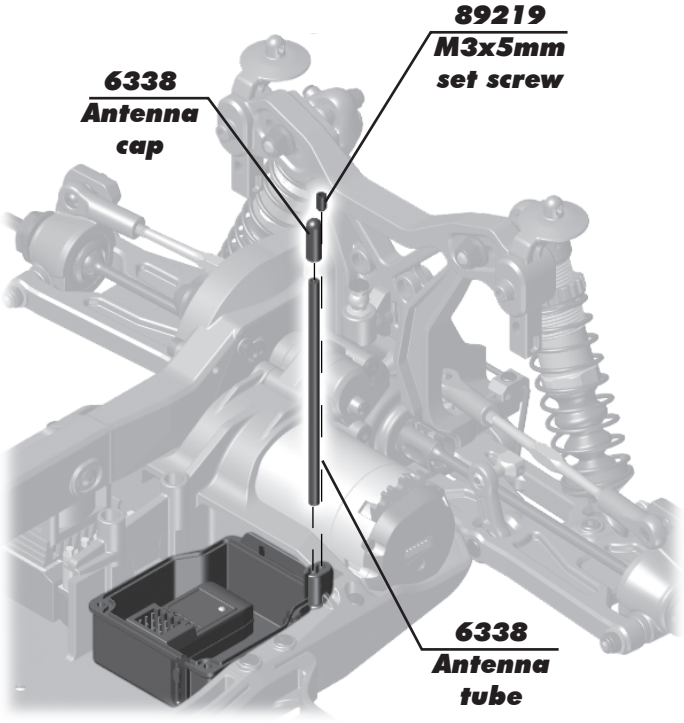

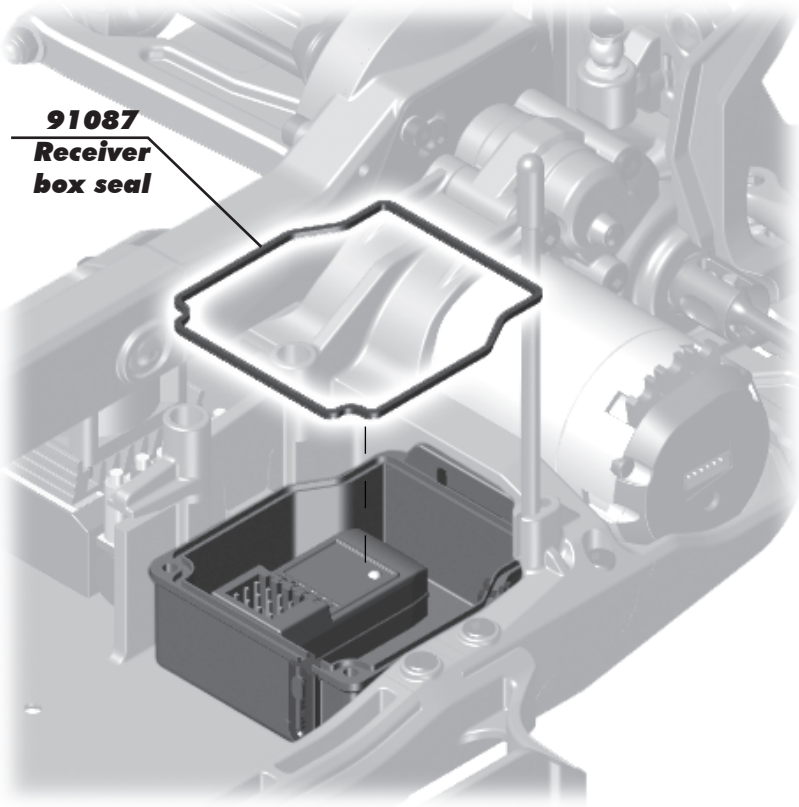

:: Electronics Installation (cont.) - Bag L-LL

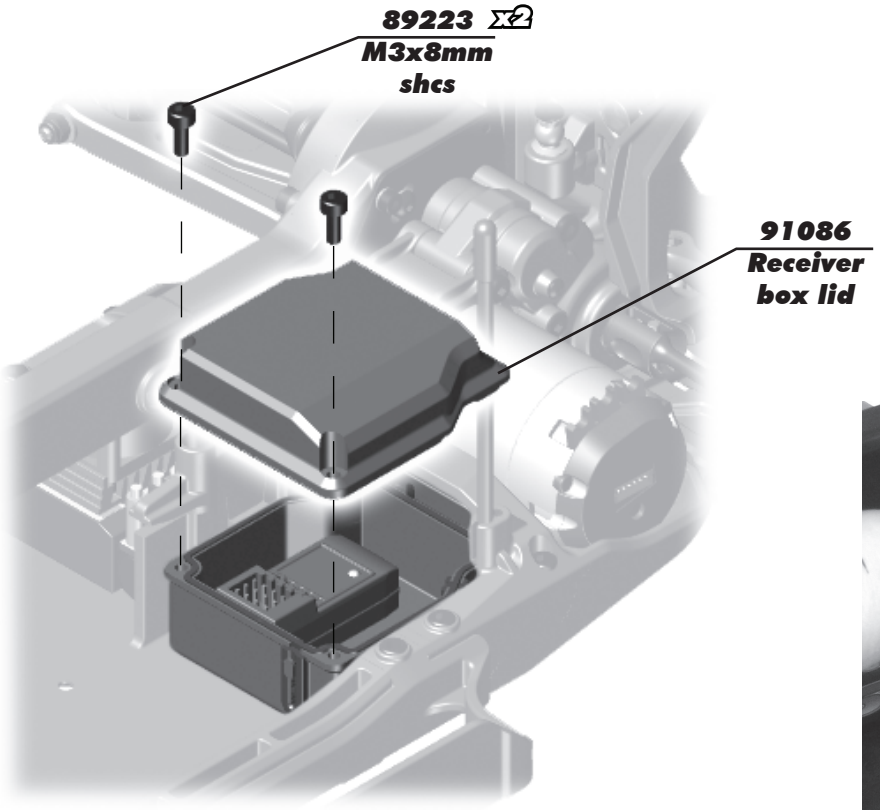

The receiver box lid will have to be installed at an angle due to the tabs on the back of the lid!

:: Electronics Installation (cont.) - Bag L-LL

FT battery strap install!

Use holes on battery cradle to mount optional ballast weights. Part #31296

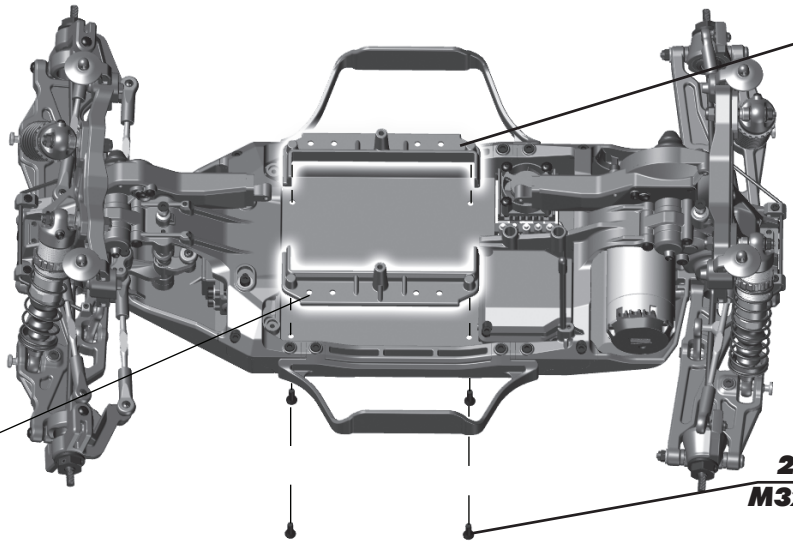

91185
Battery cradle (left and right side)

25202 x4
M3x10mm fhcs

:: Electronics Installation (cont.) - Bag L-LL

FT battery strap install!

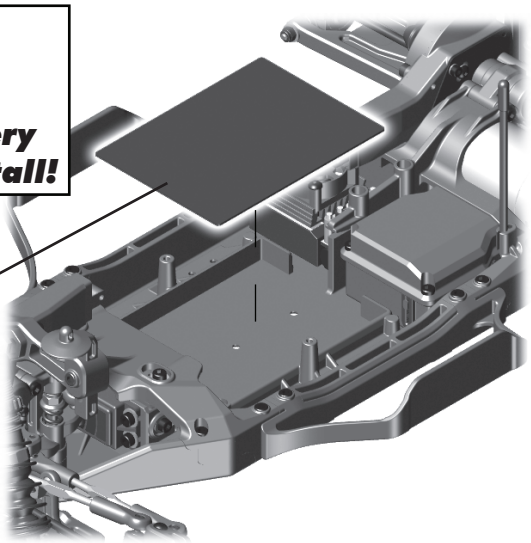

91186
Saddle pack battery foam

89208
M3x14mm fhcs

91185
Battery strap hat bushing

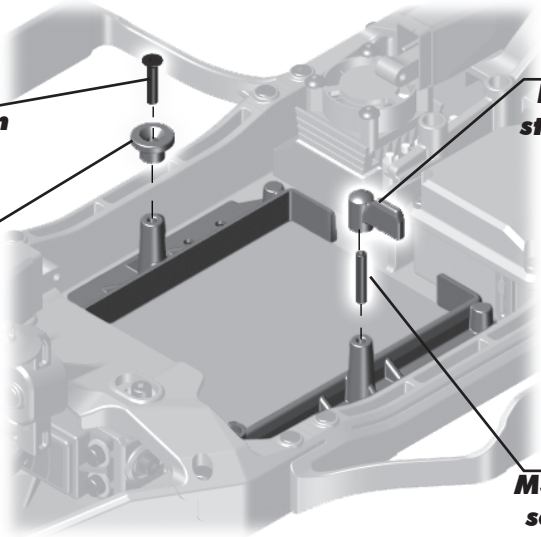

91185
Battery strap lock

4689
M3x16mm set screw

:: Electronics Installation (cont.) - Bag L-LL

FT battery strap install!

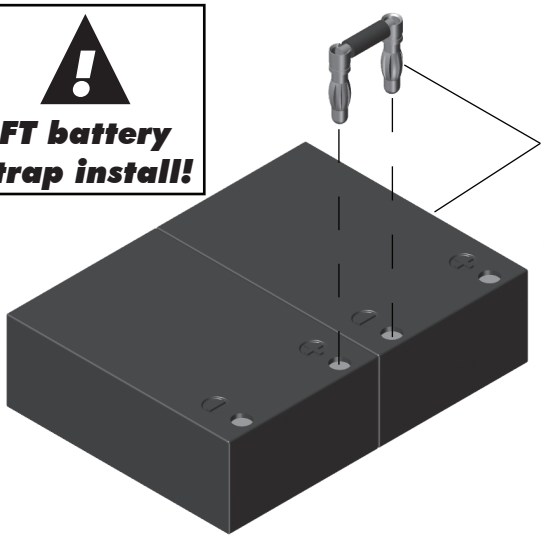

Batteries and saddle pack jumper wire are not included!

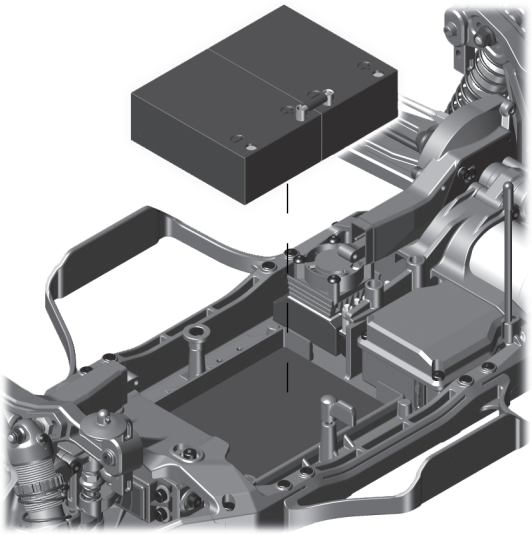

:: Electronics Installation (cont.) - Bag L-LL

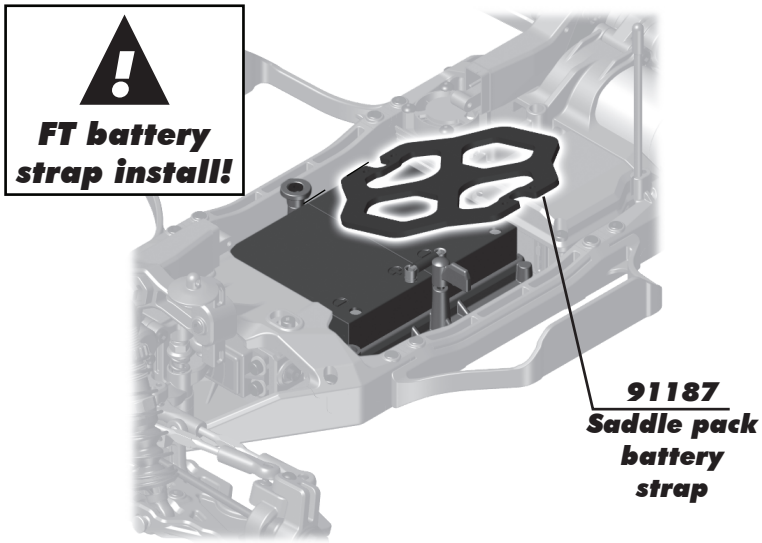

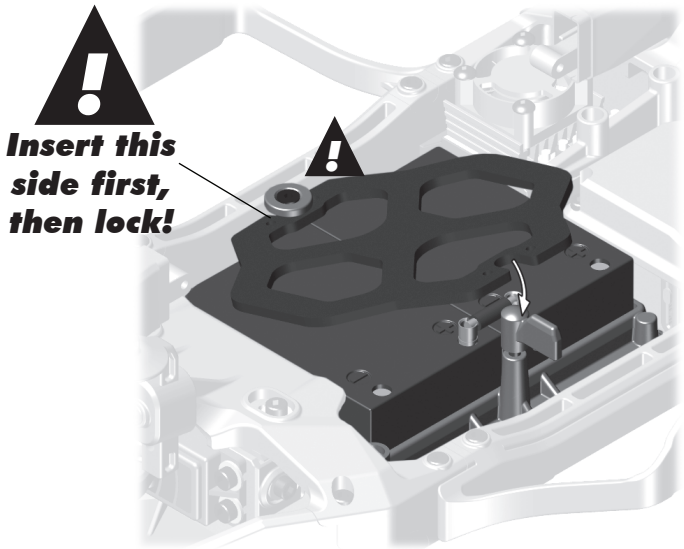

:: Electronics Installation (cont.) - Bag L-LL

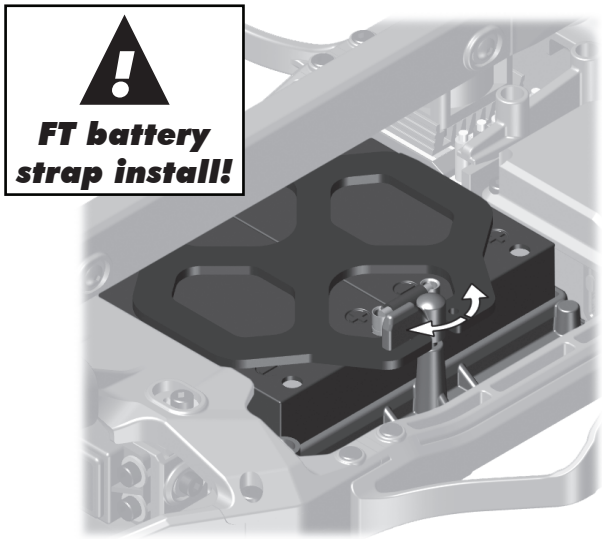

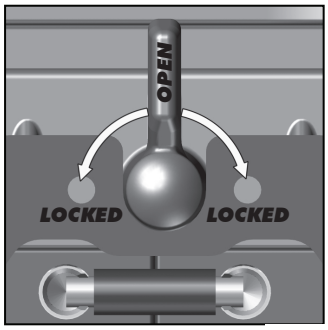

:: Electronics Installation (cont.) - Bag L-LL

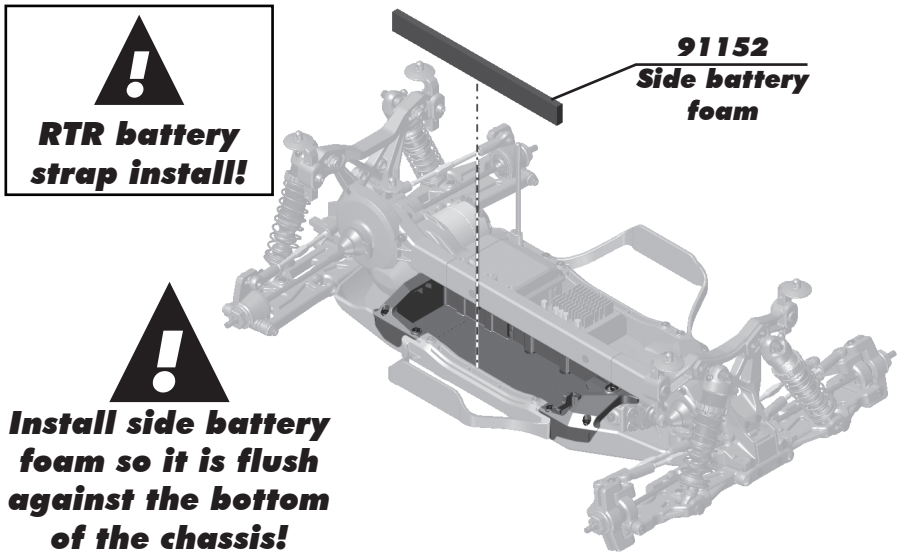

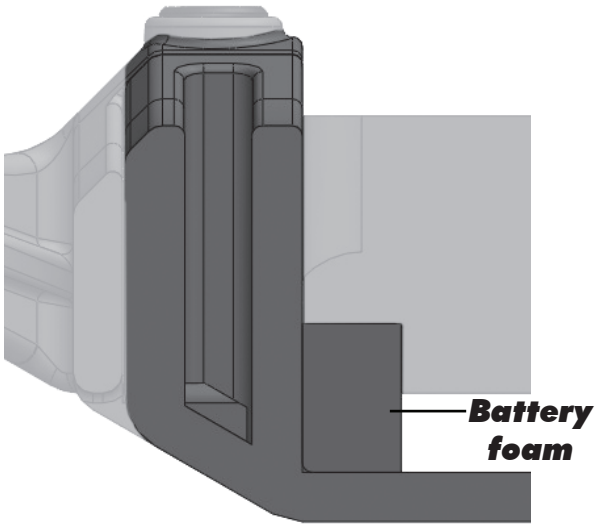

:: Electronics Installation (cont.) - Bag L-LL

RTR battery strap install!

Battery not included!

You can install the battery foam spacers to either have the battery positioned forward, middle, or back, depending on how you want the weight to be transferred !

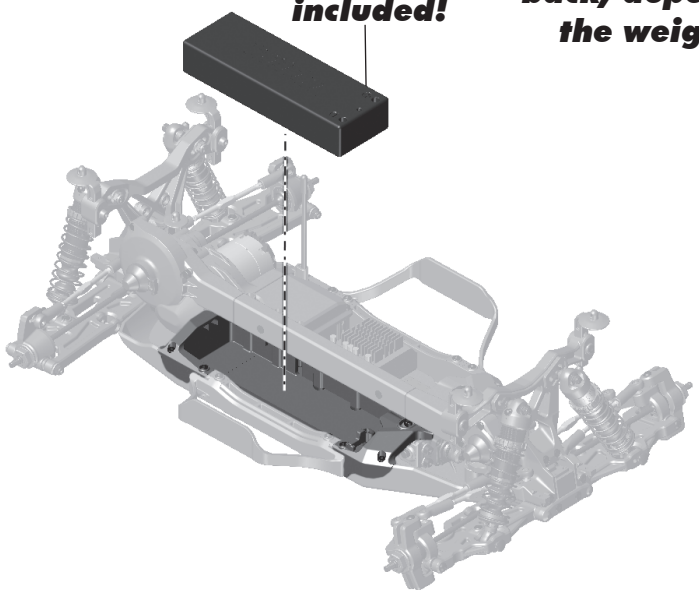

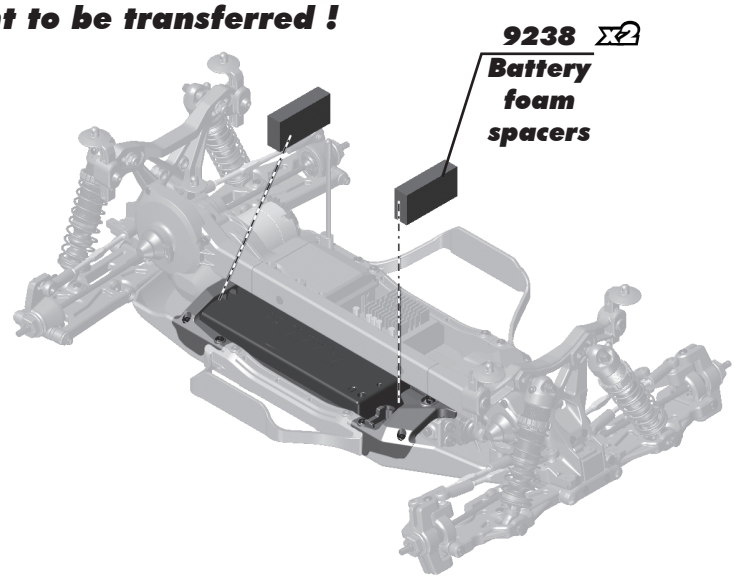

:: Electronics Installation (cont.) - Bag L-LL

RTR battery strap install!

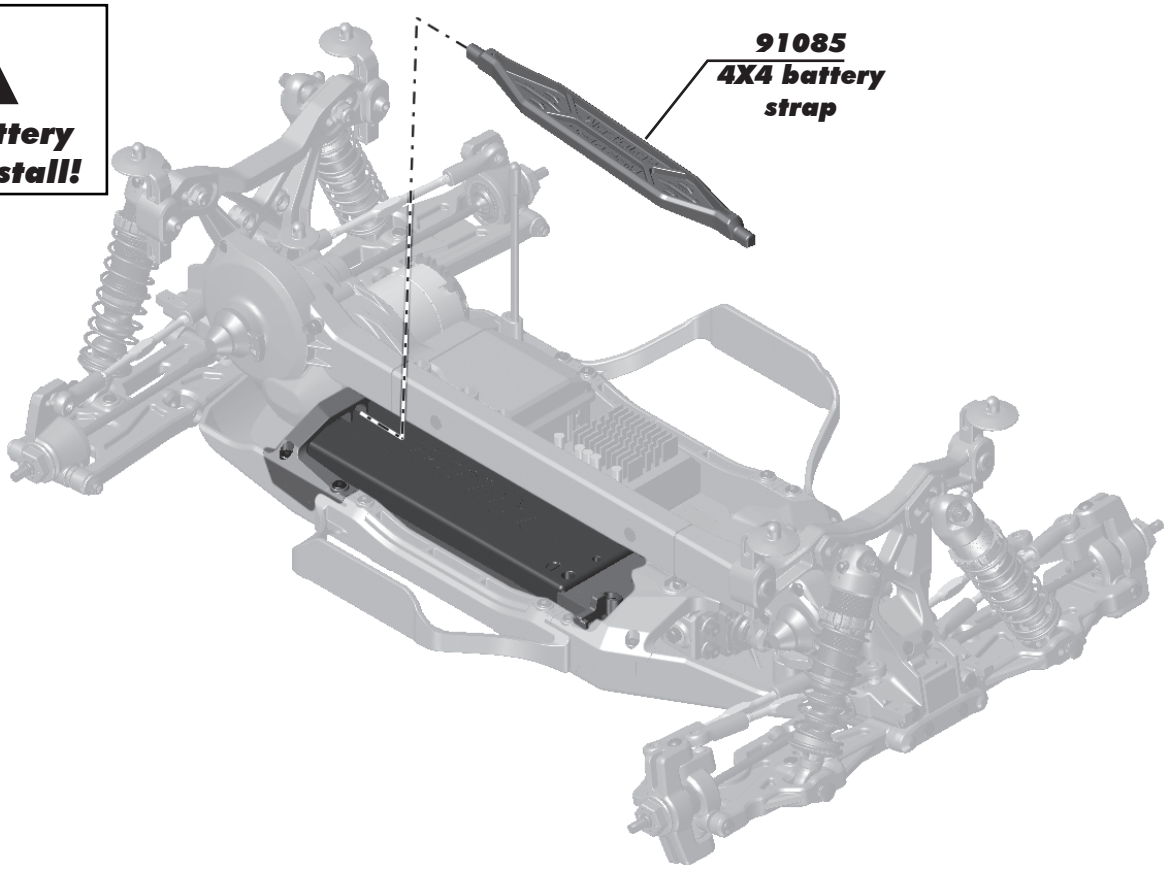

:: Electronics Installation (cont.) - Bag L-LL

RTR battery strap install!

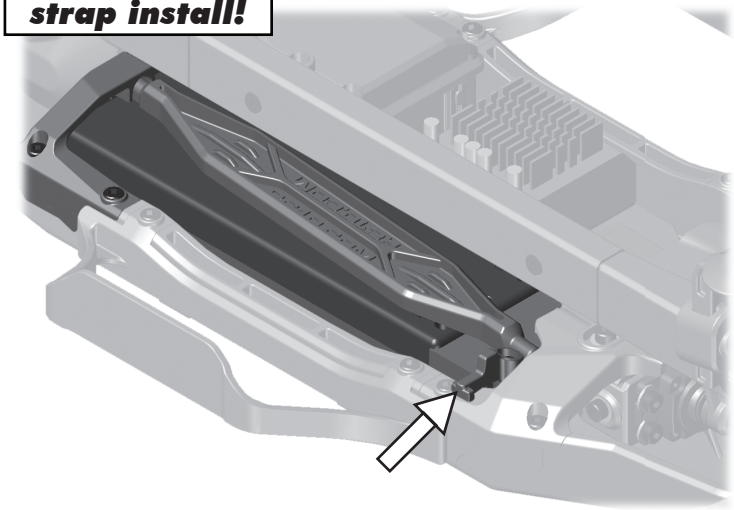

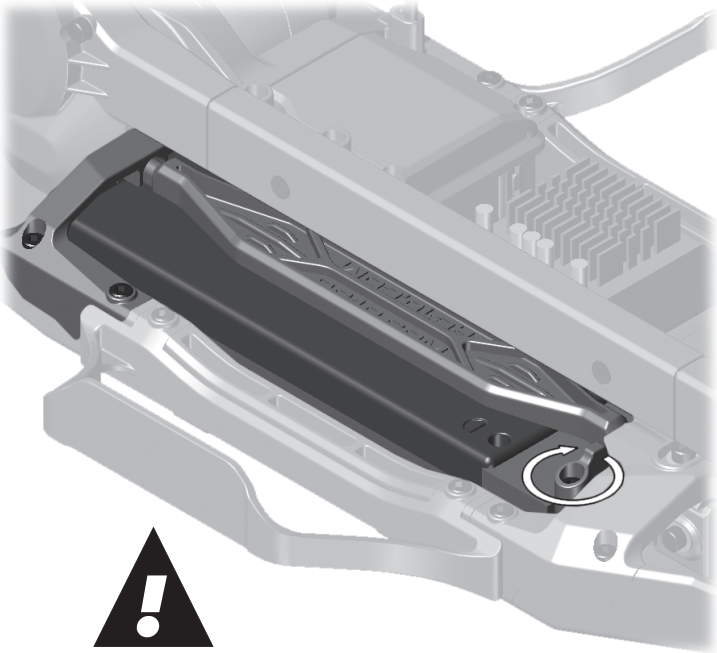

Twist the battery strap knob to the right until it clicks to lock the battery strap into place!

:: Electronics Installation (cont.) - Bag L-LL

You can run the battery wires above or below the belt cover!

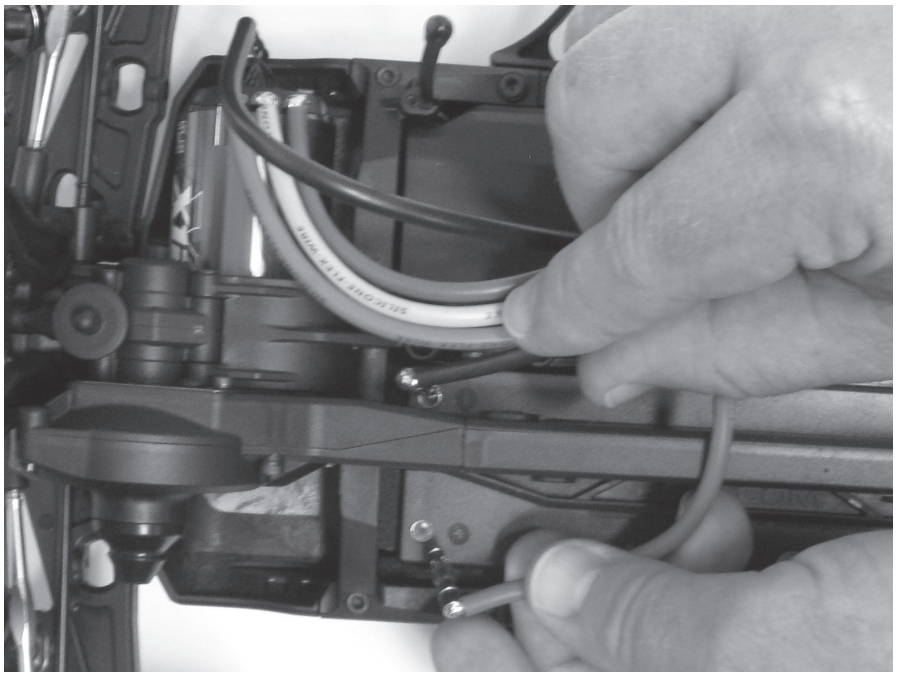

:: Front Bumper Assembly - Bag M

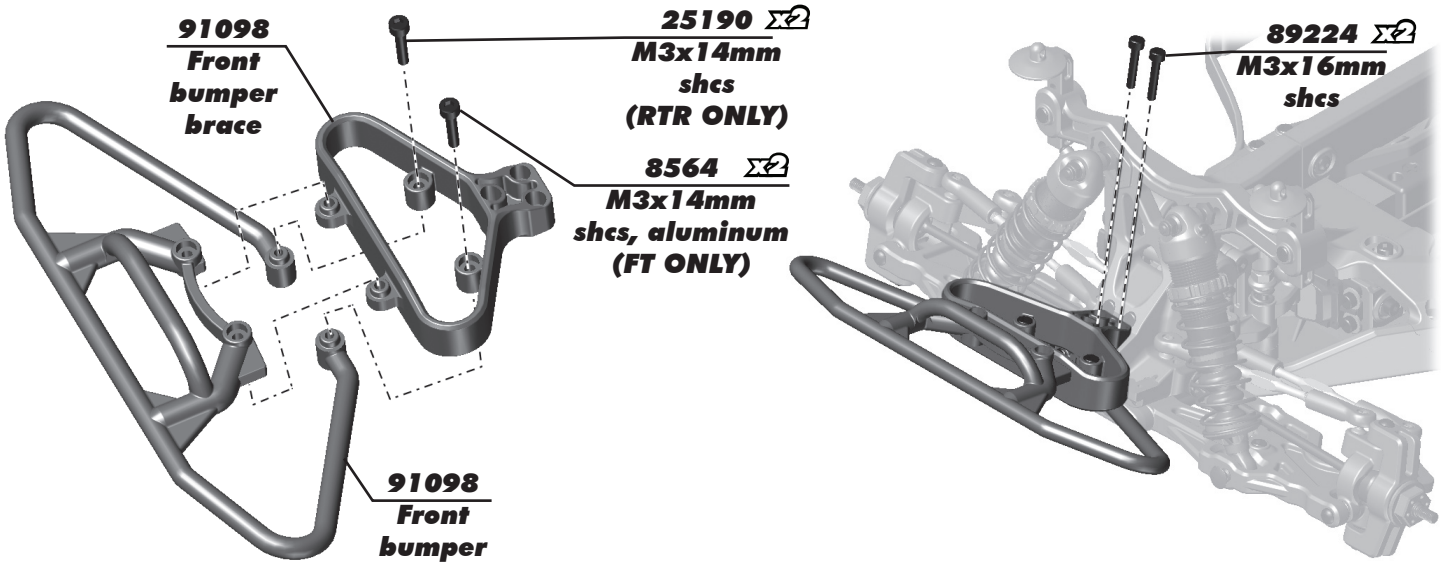

:: Front Bumper Assembly (cont.) - Bag M

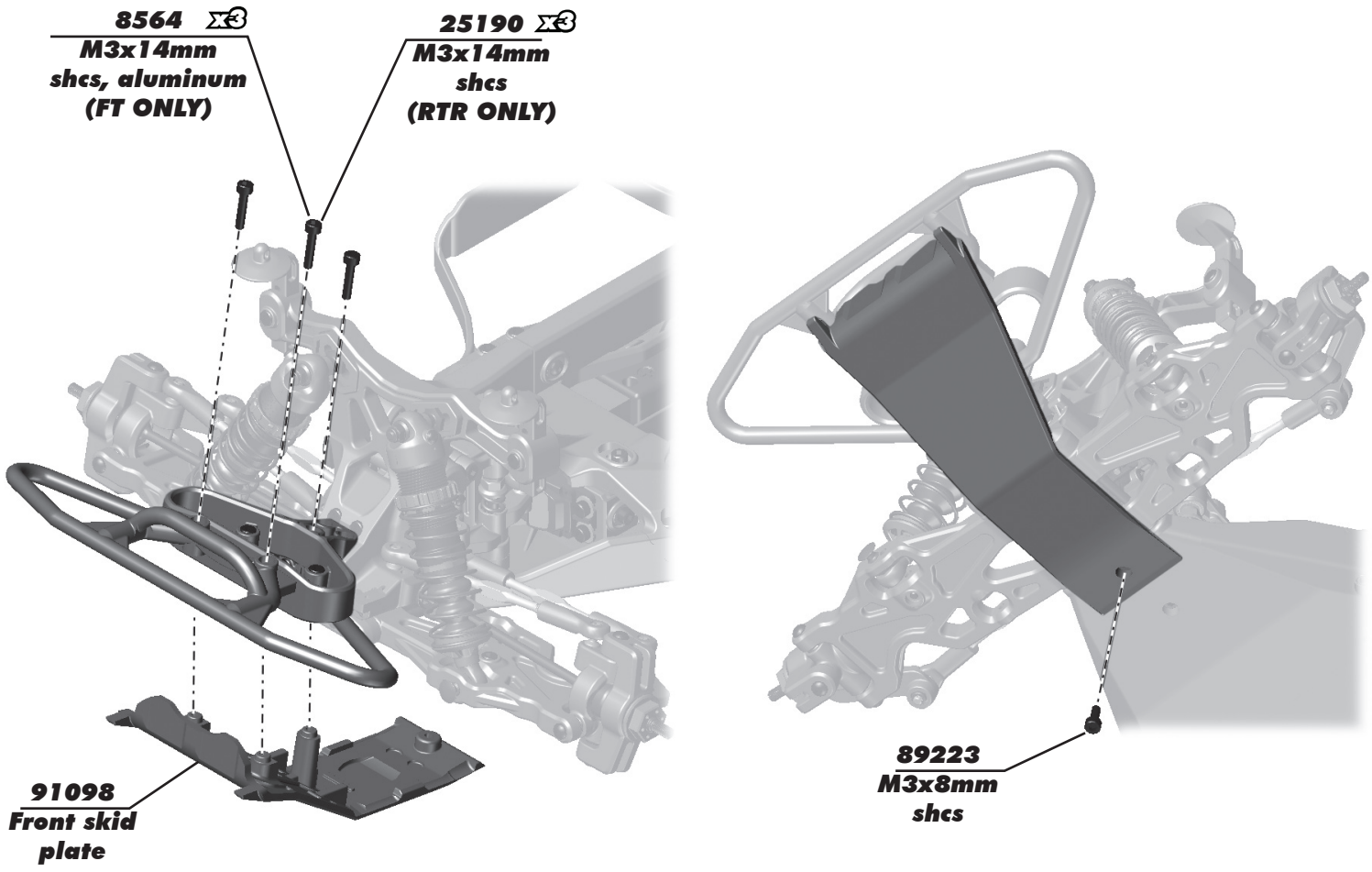

:: Rear Bumper Assembly - Bag N

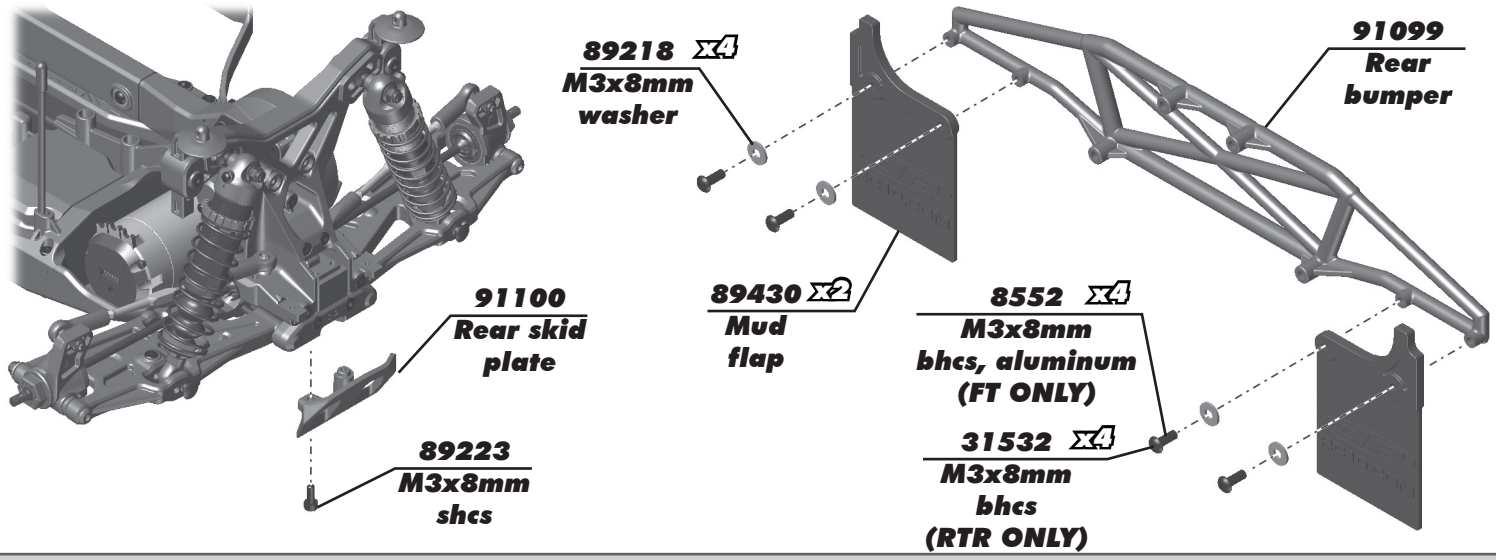

:: Rear Bumper Assembly (cont.) - Bag N

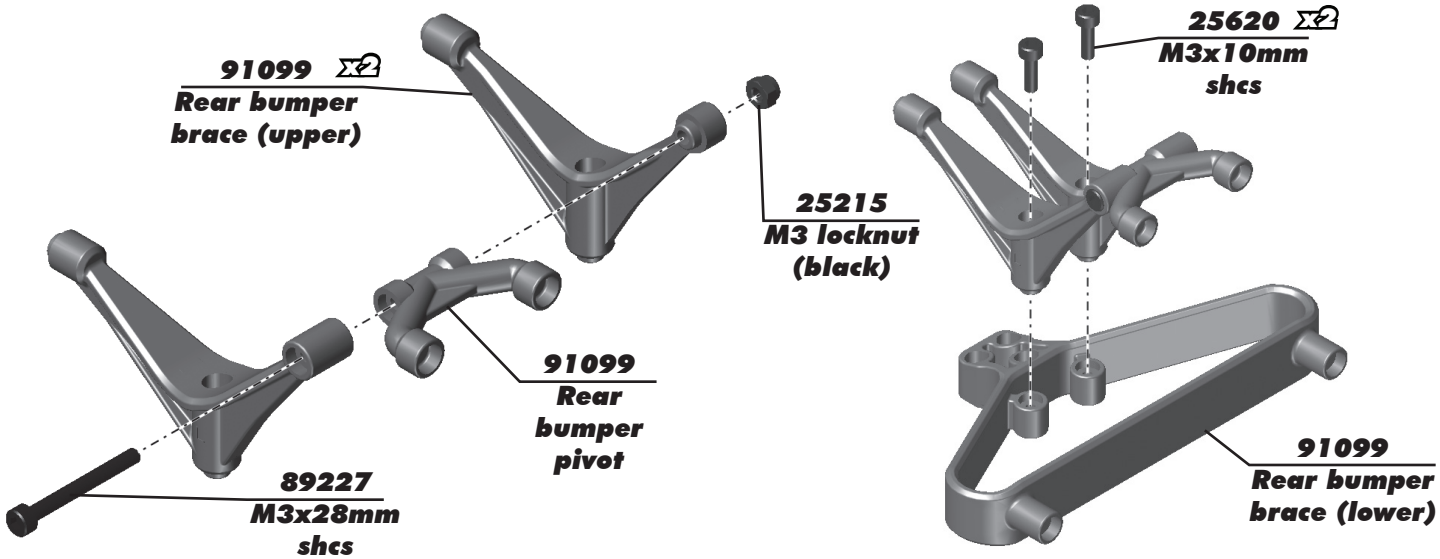

:: Rear Bumper Assembly (cont.) - Bag N

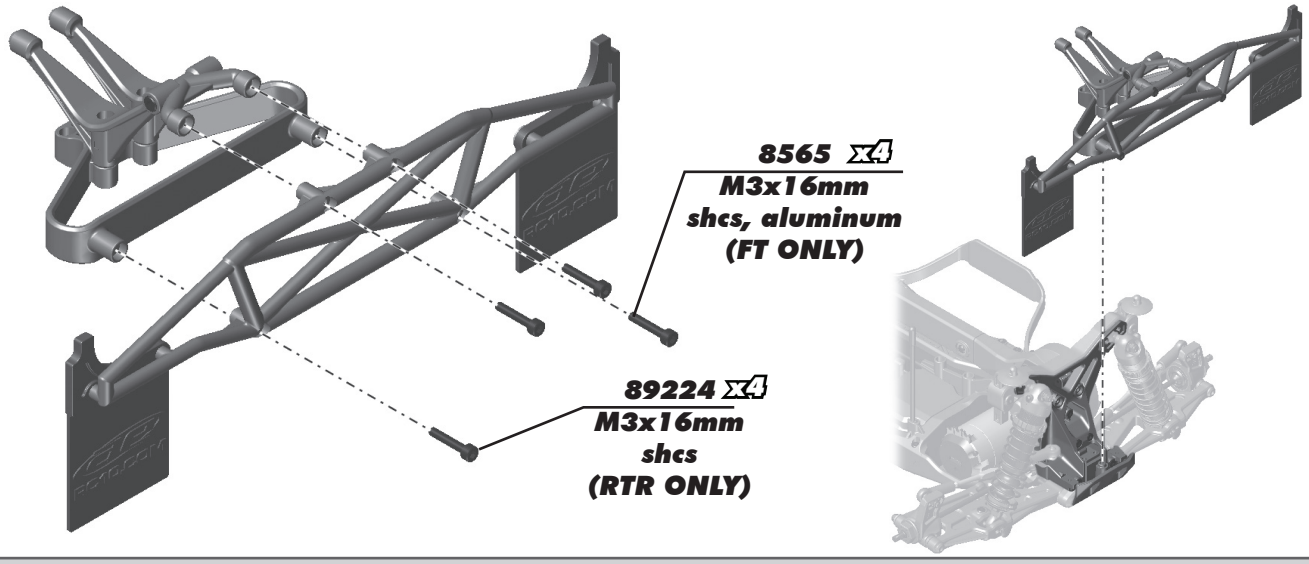

:: Rear Bumper Assembly (cont.) - Bag N

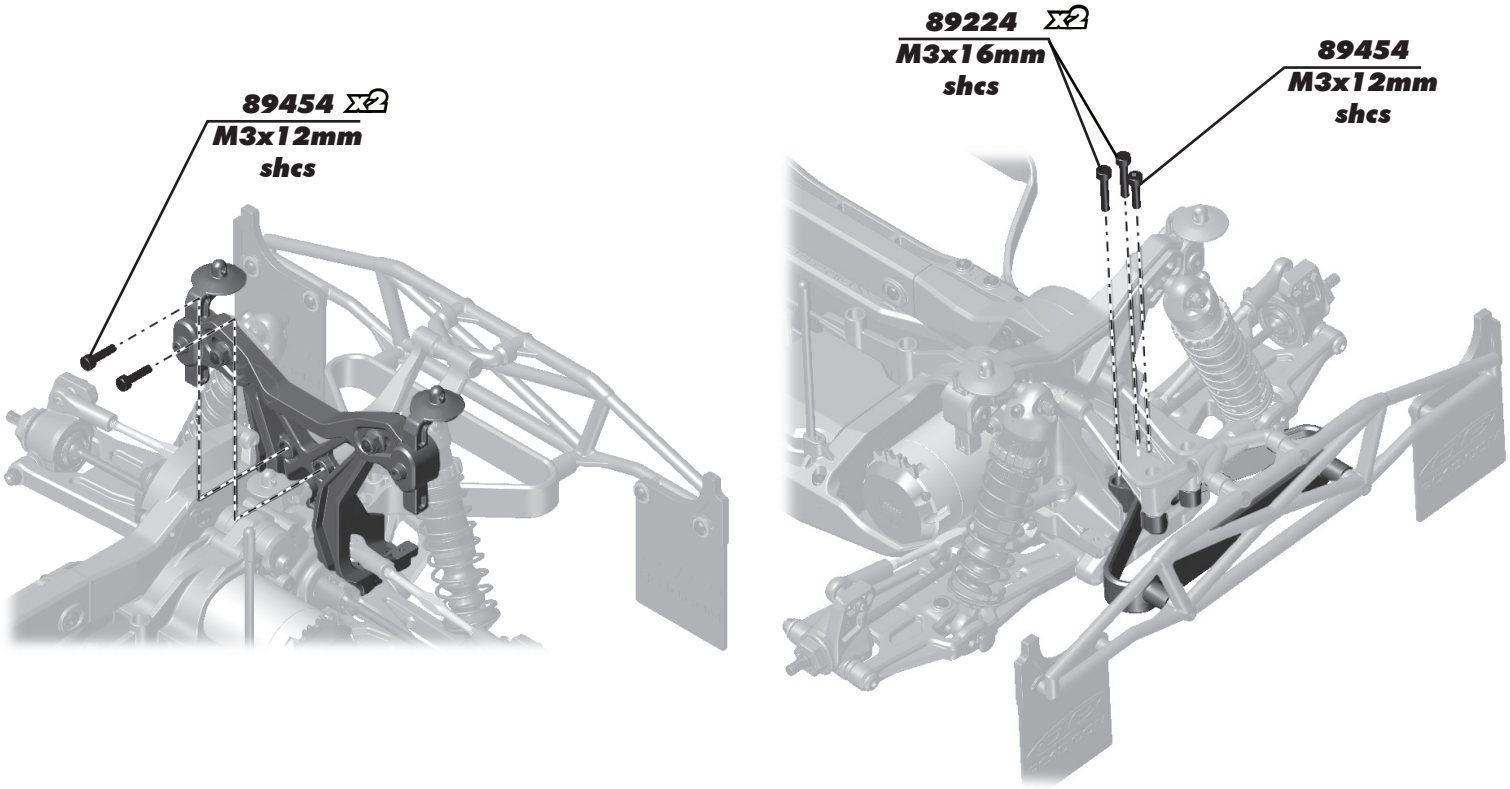

:: Chassis Brace Assembly - Bag N

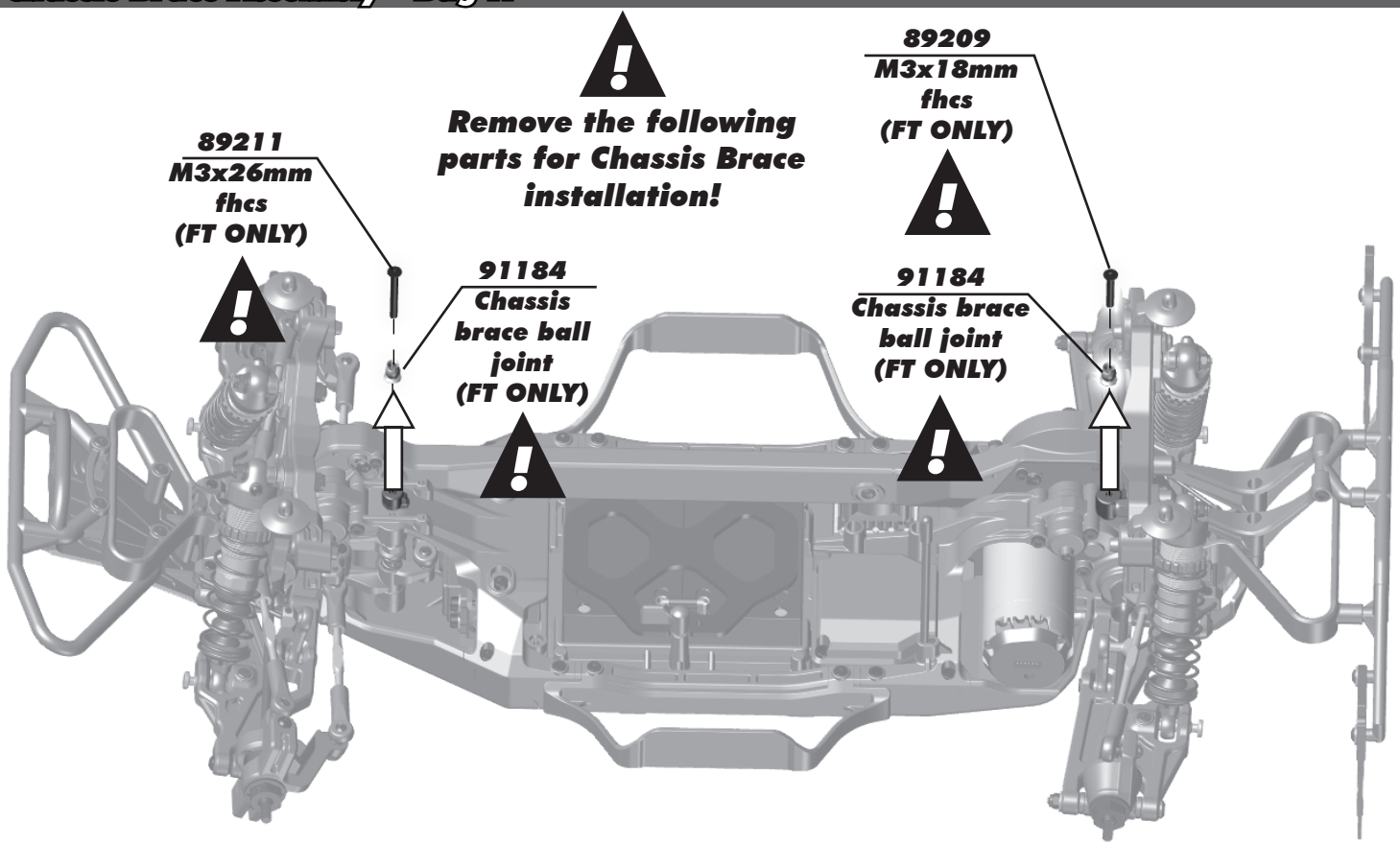

:: Chassis Brace Assembly (cont.) - Bag N

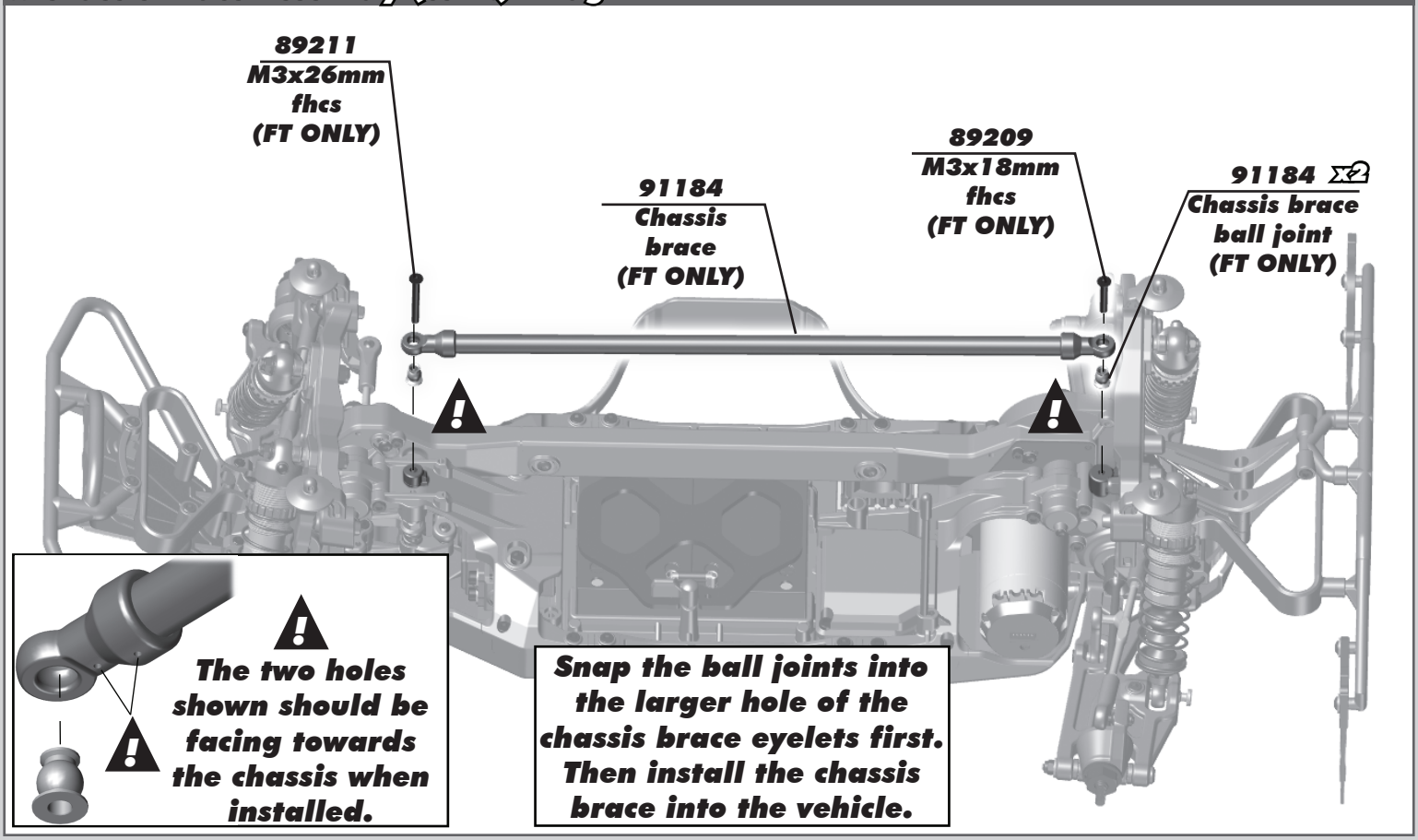

:: Wheel and Tire Assembly - Bag O

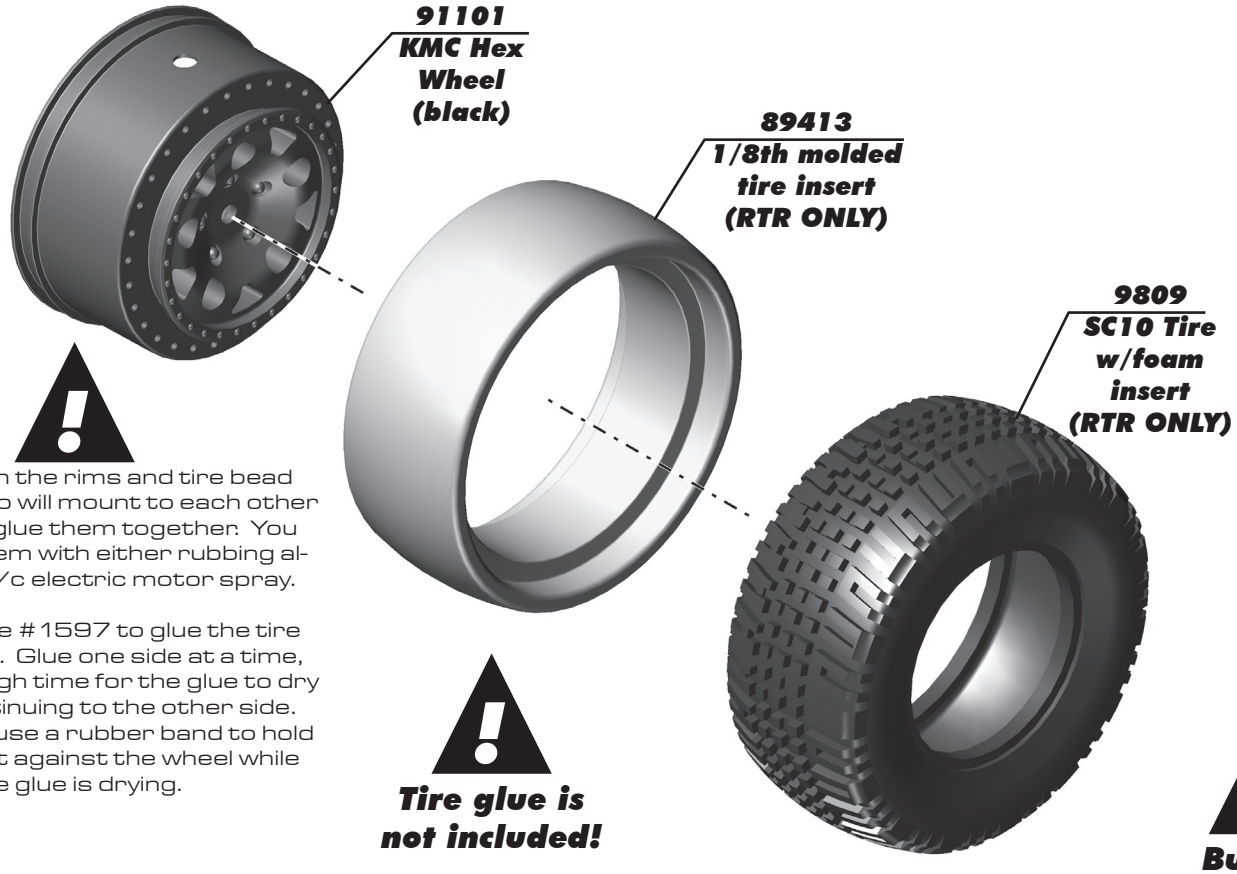

Note: Clean the rims and tire bead where the two will mount to each other before you glue them together. You can clean them with either rubbing alchohol, or r/c electric motor spray.

Use Tire glue #1597 to glue the tire to the wheel. Glue one side at a time, allowing enough time for the glue to dry before continuing to the other side. Tip: You can use a rubber band to hold the tire tight against the wheel while the glue is drying.

Tire glue is not included!

Build 4!

:: Wheel and Tire Assembly (cont.) - Bag O

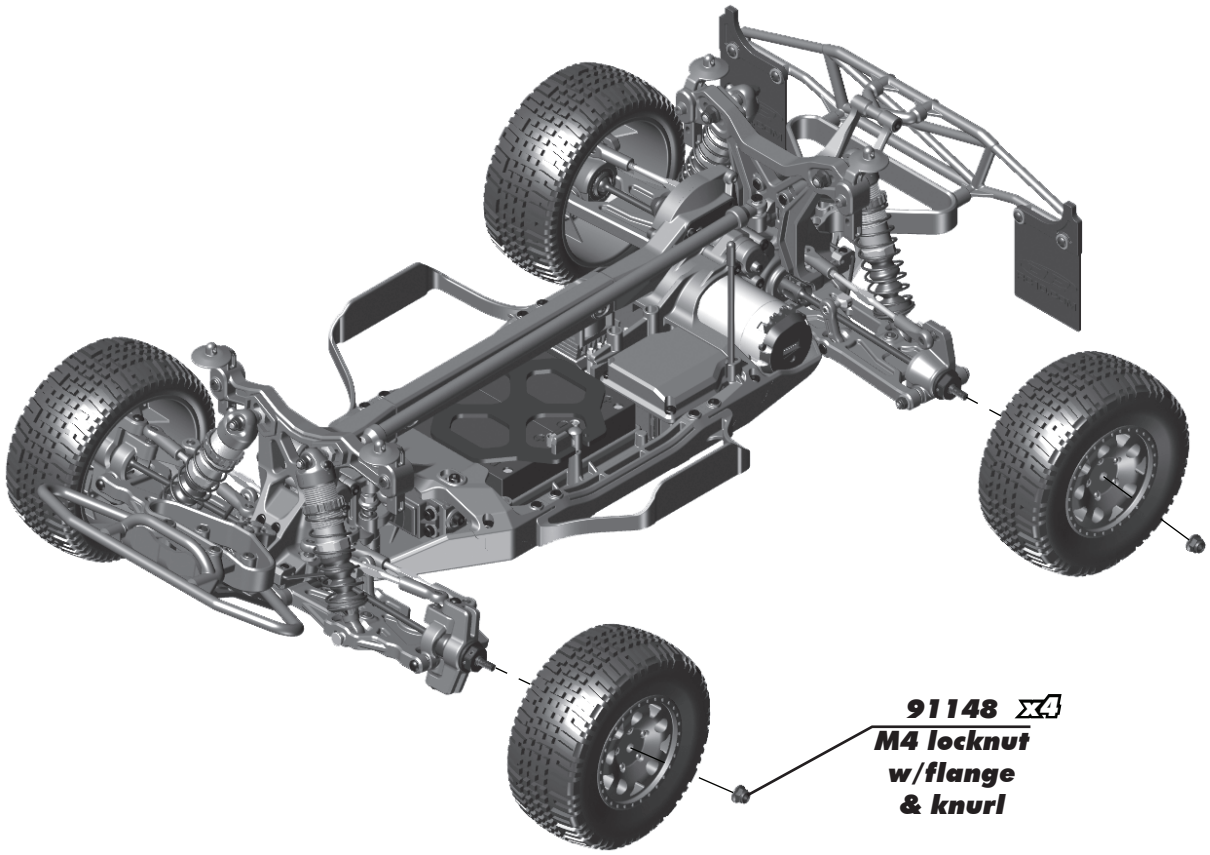

:: Body

Body :
Your SC10 4x4 FT kit comes with a clear polycarbonate body. You will need to prep the body before you paint it. Wash the inside thoroughly with warm water and liquid detergent. Dry the body using a clean, soft, lint-free cloth. Use the supplied window masks to cover the windows from the INSIDE of the body (RC bodies are painted from the inside). Using high quality masking tape, apply tape to the inside of the body to
create a design. Spray (either rattle can or airbrush) the paint to the inside of the body (prefferably dark colors first, lighter colors last).
NOTE: use ONLY paint that is recommended for use with
(polycarbonate) plastics. If you don't, you can destroy the plastic body!!!!).

After painting, cut the body along the trim lines.
NOTE: The number plates are located in the wheel wells of the body. The rear fins are located behind the bed of the body. Cut these out before you throw away the scrap pieces. Remove overspray protectant film. Make sure to drill or use a body reamer to make the holes for the body mounts, antenna, and
number plates. Add some stickers, and your ready to race!

The SC10 4x4 RTR comes with a pre-painted body. Install the body and you are ready to go.

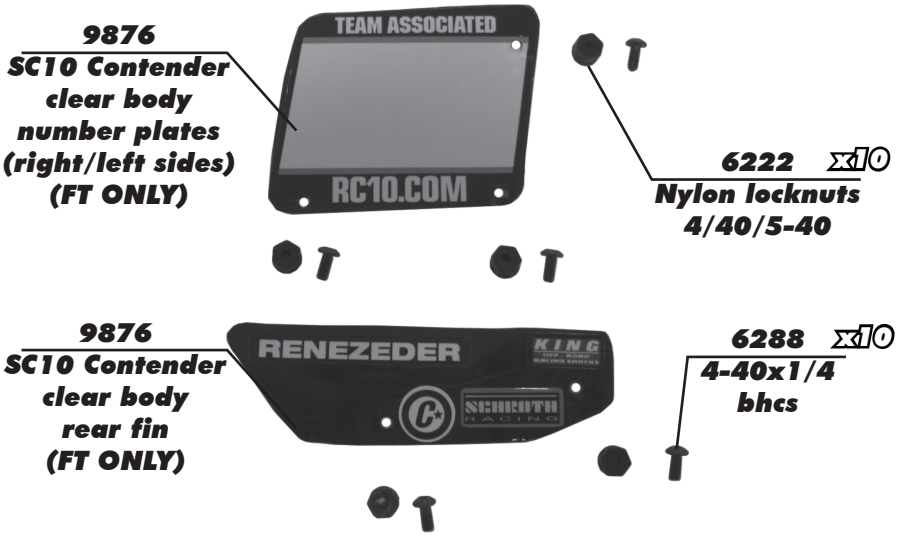

:: Body (Cont.)

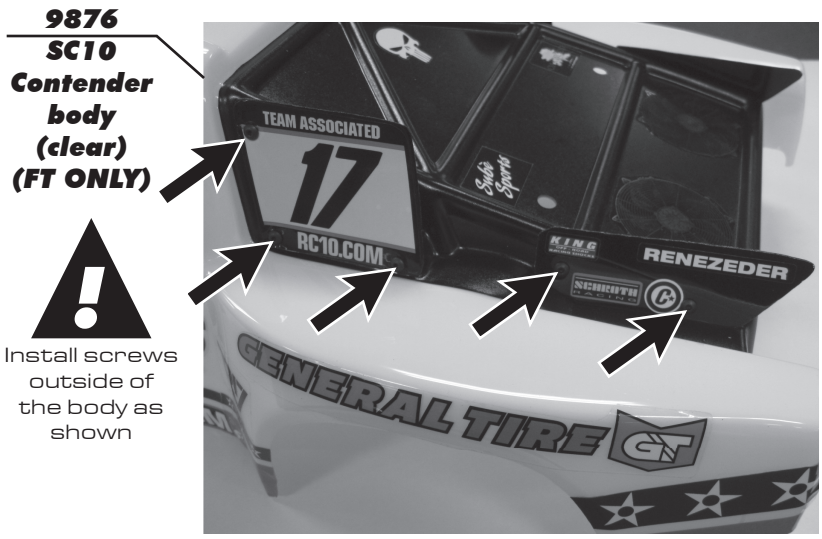

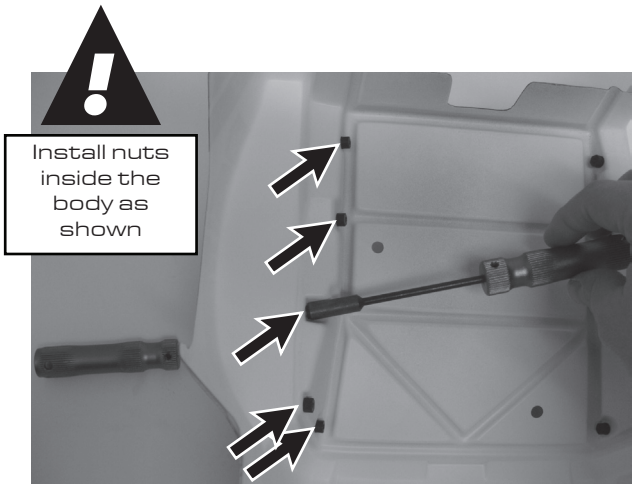

:: Body (cont.)

:: Final Adjustments

Tips for Beginners:

1. Place your car on a block or stand so that all 4 wheels are elevated and free to move. Remove the body.
2. Turn the transmitter ON.
3. Connect your battery pack and turn the ESC (electronic speed control) then turn on the power switch.
4. Turn the steering wheel on the transmitter. If the vehicle does not respond, check your battery connection, ESC plug, and servo plug are all installed correctly. If both systems are powered on, then refer to your transmitter manual for help on setting up your radio systems.
5. If the steering is working, check that the wheels turn left when you turn the transmitter wheel to the left. If not, then you must check the servo reversing switches (see transmitter manual).
6. Adjust the steering trim setting on the transmitter until the steering rack (page 7) is centered in the car. Then, adjust the steering turnbuckles (page 19) so that both front wheels point straight forward. Use the steering trim to fine-tune the centering adjustment once you finish the checklist and start driving your car.
7. Now connect the motor to the ESC (refer to ESC instructions for proper installation).
8. Set the ESC according to the manufacturer's instructions. WARNING: Some ESC's have the motor dis-connected during setup and some do not. You risk damaging your brushless system if you do not follow the manufacturer's instructions.
9. Check that your ESC settings are working by lightly applying the throttle and brake.
10. Re-install the body. You are now ready to drive !
11. REMEMBER that the transmitter is the first to be turned on and the last to be turned off. Always operate your R/C vehicle in a safe area clear of any vehicles, pedestrians, or animals.

:: Tuning Tips

Tips for Beginners:

Before making any changes to the standard setup, make sure you can get around the track without crashing. Changes to your vehicle will not be beneficial if you can't stay on the track. Your goal is consistent laps.

Once you can get around the track consistently, start tuning your vehicle. Make only ONE adjustment at a time, testing it before making another change. If the result of your adjustment is a faster lap, mark the change on the included setup sheet (make adddtional copies of the sheet before writing on it). If your adjustment results in a slower lap, revert back to the previous setup and try another change.

When you are satisfied with your vehicle, fill in the setup sheet thoroughly and file it away. Use this as a guide for future track days or conditions.

Recommended Motor Gearing:

To calculate your SC10 4x4 Final Drive Ration (a.k.a. gear ratio), use the following formula:
(spur gear # teeth) / (pinion gear # teeth) x 2.57 = Final Drive Ratio

Motor Gearing Chart

Motor	Gear Pitch	Pinion	Spur	(Final Drive Ratio) : 1
4.5 turn, 550 size	32	12	62	13.28
5.5 turn, 550 size	32	13	62	12.26
5.5 turn, 540 size	48	15	93	15.94
6.5 turn, 540 size	48	16	93	14.94
7.5 turn, 540 size	48	17	93	14.06

SC10 4X4 32 pitch gear chart - 2.57:1

	58	60	62
11	13.55	14.02	14.49
12	12.42	12.85	13.28
13	11.47	11.86	12.26
14	10.65	11.01	11.38
15	9.94	10.28	10.62

SC10 4X4 48 pitch gear chart - 2.57:1

	87	93
15	14.91	15.93
16	13.97	14.94
17	13.15	14.06
18	12.42	13.28
19	11.77	12.58
20	11.18	11.95
21	10.65	11.38
22	10.16	10.86

Differential:

The SC10 4wd heavy duty differentials (a.k.a. "diffs") are o-ring sealed, and can be filled with silicone fluid.
The recommended starting setup is 30,000 CST front and 5.000 CST rear.
For less low-speed steering, try running the front differential thicker than the rear (example, 3000 CST rear, 5000 CST in front). The truck will have the best cornering balance with more similar fluids in the front and rear diffs.

Slipper Clutch:

The assembly instructions give you a base setting for your slipper clutch. The SC10 4wd clutch is de-coupled, so the outer slipper hub drives the rear wheels and the inner slipper hub drives the belt to the front. The Team recommend making slipper settings at the track, where the grip level is at race conditions.
Torque bias front and rear is adjustable by changing the center hole diameter in the slipper pads.

Belt Tension:

The SC10 4x4 belt is 5mm wide neoprene canvas backed. It will stretch slightly over its life, so the belt tensioners will need to be adjusted from the initial settings after about 20-30 minutes of running. By touch, the belt should feel tight when pressing on top surface between the pulleys, and you should only be able to depress the belt about 3mm or 1/8".
After an initial run-in on the truck and setting the belt tension, you can verify that there is not excessive belt drag.
With the motor pinion removed, the truck should roll 10-15 feet with a slight push on level, smooth ground.

On the setup sheet, the tension slots are broken into 5 tension locations, with 3 being the middle. Since the rear pulley is the drive, we will start with tension setting 3 in rear, and 4 in front. As the belt breaks-in, adjust the front tensioner tighter until you are at the mid 3 setting. After that, any future tension adjustments to tighten the belt should be made equally front and rear.

Belt Tension with 19 Tooth Front Over-Drive or Rear Under-Drive Pulleys:

WARNING: Do not run the 19 tooth pulley for both front and rear. Only run one 19 tooth pulley on the truck at any time. Changing the drive pulleys only affects front wheel speed. The drive speed of the rear wheels is fixed through the gearbox. If you want to try the optional 19 tooth over-drive "O" front pulley OR 19 tooth under-drive "U" rear pulley, then you will need to set the tensioner to setting 1 (tightest setting) on the end of the car with the smaller 19T pulley.
Then adjust the belt tension on the opposite pulley to get the proper overall tension (usually 3 or 2 tension setting on the opposite gearbox). The Team recommend to start with the standard 20 tooth pulleys (equal drive) and then test the alternate pulleys to determine which works best for you.

Front over-drive ("O" pulley in front) makes the front wheels turn faster than the rear, and gives the front end more drive mid-to-exit. This can improve the steering feel in lower grip situations, or whenever you want more grip and steering.

Front under-drive ("U" pulley in rear) makes the front wheels turn slower than the rear, which can also help stabilize the truck in certain conditions. You must dis-assemble the slipper clutch to change the rear pulley.

:: Tuning Tips (cont.)

Front Clicker:

For your first run with the SC10 4x4, we recommend to start with full-time 4wd until you get a feel for the truck. Then, you can try loosening the front clicker nut which will allow the clicker to operate.

The front clicker will take away front wheel braking and let the front tires spin freely off-power. This gives the front end more grip, and gives more steering in the turns. To allow the clicker to operate, set the nut at 2mm gap between the nut and the end of the front topshaft. If you want to lock the clicker (called "full-time 4wd") then tighten the nut until it bottoms (about 3mm or more gap from the nut to the end of the topshaft).

If you are running full-time 4wd with the clicker nut locked down, you may hear the belt skip 4-5 teeth as it changes direction from drive to brakes at top speed. Under normal circumstances, the belt should not skip under braking from anything but top-speed (30+ m.p.h.). Running full-time 4wd will put more stress on the belt, and belt wear should be monitored more closely, inspecting the belt and pulleys after every day of running (about 45 minutes run time).

Shock Piston and Fluid:

The SC10 4x4 kit is built with 4 hole, 1.2mm hole diameter pistons. All pistons have a number molded into the top. 12 denotes 1.2mm diameter holes. The optional 1.1 and 1.3mm hole diameter pistons are included.

As a rule of thumb, larger hole pistons decrease damping which can help the truck in bumpy and low-grip situations. On smoother tracks, or for large jumps, you may want use smaller hole pistons which increase damping and take away some grip.

Typically, your SC10 4x4 shocks will work best with shock fluid rates between 25 and 35 wt (275 - 425 CST). Use the thicker fluids in the range when changing to larger hole pistons, and also use the thinner weight fluids when changing to a smaller hole pistons.

Front Camber Link Length & Number of Washers Under Ballstuds:

Changing the length of the camber link is considered a bigger step than adjusting the ballstud height. Your first setting change on the track should be to try the inside vs. outside locations on the shock tower. Typically shortening the camber link (or lowering the ballstud) will give the front end less grip which is more stable. Lengthening the camber link (or raising the ballstud) will give the front more grip at low speed but it can have slower steering response mid-to -exit of the turns.

Front Camber:

A good starting camber setting is —1 degrees (top of the tire leaning in). Positive camber, where the top of the tire is leaning out, is typically not recommended. Trick: Set your car on a flat surface, and set a soda can next to your tire as a reference for vertical, or zero camber. Both sides should be equal in setting. For serious racers, Associated makes the #1719 Factory Team camber gauge.

Front Toe-in:

Zero degree toe-in (tires pointing straight forward) is the setting that should be used in almost all track conditions. Occasionally you can increase turn in by adding a little toe-out (front of tires point slightly out). Front toe in is not a typical tuning adjustment used by The Team.

Front Arm Hole:

The kit blue springs and outside front arm hole will work best in most cases. Changing to the inner hole will soften the suspension and give more front end grip. Typically you will want to change to a heavier spring when changing arm hole location inward.

Front Tower hole:

The kit setting of the middle hole is a good standard setting for most tracks. Moving the shock out on the tower will make the truck easier to drive and normally will decrease entry steering but increase mid to exit steering. When running the inside tower hole, try running a heavier spring to compensate for the steeper shock angle.

Front Ride Height:

The standard front ride height setting is 27mm (without body). Check the ride height by lifting up the entire truck about 8-12 inches off the bench and drop it. After the suspension "settles" into place, raise or lower the shock collars as necessary until there is 27mm gap from the bottom of the chassis to the ground.

Tuning Guide: Making large ride height adjustments up or down from this setting will tend to make the truck feel unpredictable.

:: Tuning Tips (cont.)

Anti-Squat:

Anti-squat denotes the angle of the rear arms relative to the ground. Zero anti-squat means that the rear arms are flat, parallel with the ground. The kit setting is 2 degrees, and can increased to 3 degrees of anti-squat by changing to the included 3+3 rear suspension mount. Adding anti-squat tends to make the car "rotate" more in corners, but doesn't handle as well through the bumps.

Rear Camber Link Length & Number of Washers Under Ballstuds:

Changing the length of the camber link is considered a bigger step than adjusting the ballstud height on the rear chassis brace. Typically shortening the camber link (or lowering the ballstud) will give the rear end less roll and the car will tend to accelerate or "square up" better. Lengthening the camber link (or raising the ballstud) will give the rear more roll and more cornering grip. You should normally use the kit setting (inside on tower, middle "B" hole on hub) and only adjust the ballstud height.

Rear Hub Spacing:

You have 3 options for rear hub spacing, FORWARD, MIDDLE, & BACK. The kit setting MIDDLE provides the most rear traction, and will be used most often. For additional weight on the rear tires in slick conditions, run hubs FORWARD. For improved handling in bumps or rhythm sections, try moving the hubs to BACK. This can also make the car handle better in 180 degree turns.

Rear Camber:

A good starting camber setting is —1 degrees. Use the included #1719 camber gage to set your camber as seen below. Adding a small amount of positive camber, where the top of the tire is leaning out, will tend to improve straight-line acceleration on loose tracks.

Front and Rear Swaybars:

The optional #91123 4x4 front and #91124 rear swaybar set (a.k.a. anti-roll bar set) allows you to add roll resistance to stabilize the truck in turns. The bars are 1.5, 1.8, 2.0, and 2.2 mm (from softest to stiffest).

Start with the same size bar front and rear. A swaybar has minimal effect on handling over bumps and jumps. It is especially helpful tuning item if your truck needs high-speed stability to stop traction rolling.

Rear Arm Hole:

The inner hole in the arm tends to work the best over the bumps and jump sections. Changing to the outer hole in the rear arm will tend to make the rear end feel more "locked in" and less responsive. You may need to run a softer spring when using outside in the rear arm.

Rear Tower Hole:

Try adjusting the shock tower hole before changing springs or arm mount location. The kit setting of the middle hole will be optimal on most tracks. Moving the shock out on the tower will increase typically yield more sidebite (cornering traction) on corner exit and less bite on entry. Moving the shock in on the tower will yield more stability on entry and less cornering traction on exit, and is typically better in bumps.

Rear Ride Height:

The rear ride height setting you should use most often is 27mm (without body). Check the ride height by lifting up the entire truck about 8-12 inches off the bench and drop it. After the suspension "settles" into place, raise or lower the shock collars as necessary until there is 27mm gap from the bottom of the chassis to the ground. The chassis should look level from the side.

Tuning Guide: Making large ride height adjustments up or down from this setting will tend to make the car feel unpredictable.

Setup Sheets:

Most often, the best way to get your car handling right is to go to our website www.rc10.com and click on the links to Setup Sheets, then SC10 4x4 setups. Our team of professional drivers help develop these setups at National events. Also, most drivers have a "base" setup that they use as a starting point for every event. Try running some of our base setups OR look for track conditions and tires that are similar to your local track and mimic that setup.

Remember, each adjustment has a purpose, so copy everything from the setup sheet and then make adjustments based on the recommendations in here and in our online tuning guide.

:: Shocks

6469	Black O-Ring	4
21332	Shock O-Ring	8
31510	M2 x 4mm BHCS	6
91052	13x26mm Shock Kit, Blue	1
91053	13x30mm Shock Kit, Blue	1
91054	Shock Cartridge	2
91055	Shock X-Rings	8
91056	Shock Rod Ends	4
91057	Shock Shaft, 26mm	2
91058	Shock Shaft, 30mm	2
91059	Shock Piston Hardware Kit	1
91060	Shock Body, 26mm Blue	2
91061	Shock Body, 30mm Blue	2
91062	Molded Shock Caps	4
91063	Shock Bladders, Seals	4
91064	Pistons, 1.1mm	4
91065	Pistons, 1.2mm (Kit)	4
91066	Pistons, 1.3mm	4
91067	Spring Cups / Collars	4
91070	Shock Boots	4
91110	FT 13mm Shock Body, 26mm hard	2
91111	FT 13mm Shock Body, 30mm hard	2
91112	FT TiN Shock Shaft, 26mm	2
91113	FT TiN Shock Shaft, 30mm	2
91125	FT Aluminum Pivot Ball	4

:: Springs

91071	13mm Front Spring Kit	1
91073	13mm Spring Front, 3.5LB Green	2
91074	13mm Spring Front, 3.9LB White	2
91075	13mm Spring Front, 4.3LB Blue (RTR)	2
91076	13mm Spring Front, 4.8LB Yellow (FT)	2
91077	13mm Rear Spring Kit	1
91078	13mm Spring Rear, 2.5LB White	2
91079	13mm Spring Rear, 2.8LB Blue	2
91080	13mm Spring Rear, 3.1LB Yellow (RTR/FT)	2
91081	13mm Spring Rear, 3.4LB Red	2

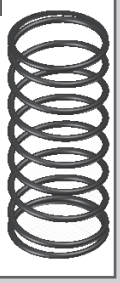

:: Shock Fluid

5420	10 Weight Silicone Shock Fluid	2oz.
5421	20 Weight Silicone Shock Fluid	2oz.
5422	30 Weight Silicone Shock Fluid	2oz.
5423	40 Weight Silicone Shock Fluid	2oz.
5424	22.5 Weight Silicone Shock Fluid	2oz.
5425	80 Weight Silicone Shock Fluid	2oz.
5426	27.5 Weight Silicone Shock Fluid	2oz.
5427	15 Weight Silicone Shock Fluid	2oz.
5428	25 Weight Silicone Shock Fluid	2oz.
5429	35 Weight Silicone Shock Fluid	2oz.
5430	45 Weight Silicone Shock Fluid	2oz.
5431	55 Weight Silicone Shock Fluid	2oz.
5432	32.5 Weight Silicone Shock Fluid	2oz.
5433	37.5 Weight Silicone Shock Fluid	2oz.
5434	42.5 Weight Silicone Shock Fluid	2oz.
5435	50 Weight Silicone Shock Fluid	2oz.
5436	60 Weight Silicone Shock Fluid	2oz.
5437	70 Weight Silicone Shock Fluid	2oz.
5438	47.5 Weight Silicone Shock Fluid	2oz.

:: Gear Differential

4675	M2.5x6mm FHCS	6
91005	4X4 Gear Diff Case	1
91006	4X4 Gear Diff Outdrives	2
91007	4X4 Gear Diff Rebuild Kit	1
91008	4X4 Gear Diff Kit	1
91129	FT Lightweight Gear Diff Outdrives	2
91157	10x16x4mm Bearings	2

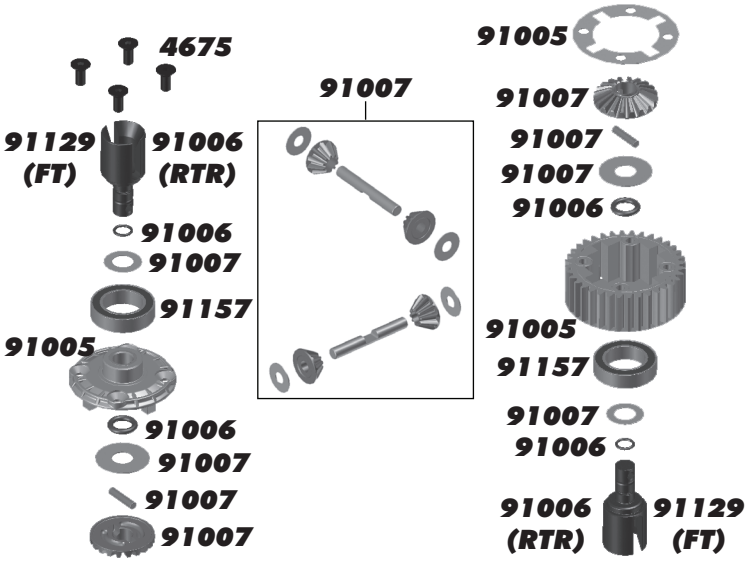

:: Turnbuckles

91038	HD Turnbuckles, 65mm	2
91039	HD Turnbuckles, 80mm	2
91051	HD Ball Cups	12
91115	FT Ti Heavy Duty Turnbuckle, 65mm	2
91116	FT Ti Heavy Duty Turnbuckle, 80mm	2

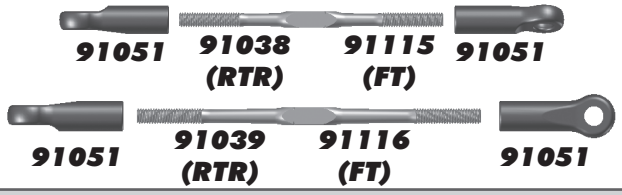

:: Lubes & Adhesives / Decals / Misc.

1105	FT Green Slime Shock Lube	1
1596	FT Locking Adhesive	1
1597	FT Tire Adhesive, medium	1
5450	Silicone Diff Fluid 1000cst	1
5451	Silicone Diff Fluid 2000cst	1
5452	Silicone Diff Fluid 3000cst	1
5453	Silicone Diff Fluid 5000cst	1
5454	Silicone Diff Fluid 7000cst	1
5455	Silicone Diff Fluid 10000cst	1
5456	Silicone Diff Fluid 20000cst	1
5457	Silicone Diff Fluid 30000cst	1
5458	Silicone Diff Fluid 60000cst	1
5459	Silicone Diff Fluid 100000cst	1
6588	Black Grease - 4cc	1
6591	S.Diff Lube - 4cc	1
6636	Silicone Grease - 4cc	1
6727	Servo Tape	2
716	Reedy 2009 Sticker Set	1
717	Reedy Powered Logo Decal	1
3816	American Bumper Sticker	1
3820	AE Logo Decal Sheet	1
3834	AE Blue Embossed Logo Sticker	2
91169	SC10 4X4 Decal Sheet	1

:: Steering

25215	M3 Locknut	20
25620	M3x10mm SHCS	20
25658	M3x6mm SHCS	20
89216	M4 Locknut	10
89218	M3x8mm Washer	10
89224	M3x16mm SHCS	10
89454	M3x12mm SHCS	10
89528	Steel Washer 3x5.6mm	10
91000	4X4 Servo Saver/Bellcrank (RTR)	1
91001	4X4 Steering Hardware	1
91002	Steering Bearings 3x8x4mm	4
91003	4X4 Servo Horns	1
91028	4X4 Steel Hat Bushings	10
91047	HD Ballstuds, 6mm	8
91048	HD Ballstuds, 8mm	8
91181	4X4 Option Steering Rack (FT)	1

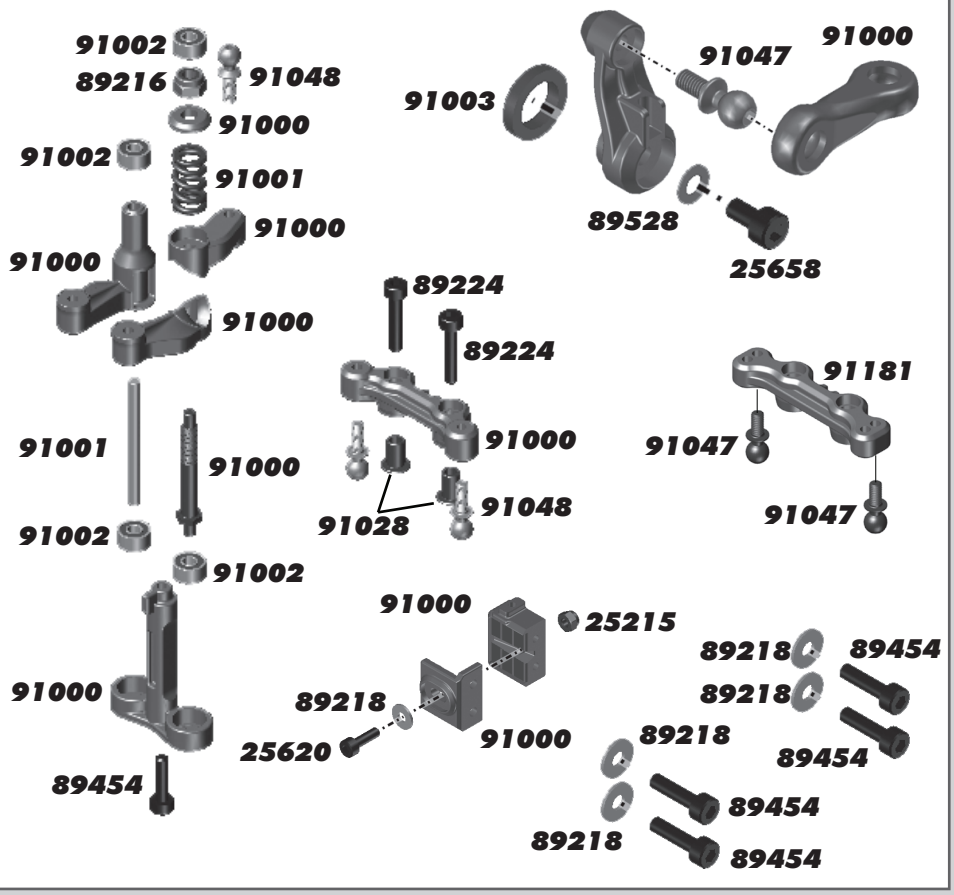

:: Front Bumper, Front Shock Tower

6936	Washers, aluminum	10
8564	FT M3x16mm SHCS, aluminum	6
25190	M3x14mm SHCS	20
25217	M4 Locknut w/Flange	20
25612	M3 Locknut w/Flange	20
31551	M4 Flanged Locknut, aluminum	6
89223	M3x8mm SHCS	10
89224	M3x16mm SHCS	10
89454	M3x12mm SHCS	10
91020	4X4 Front Shock Tower	1
91021	4X4 Threaded Inserts	2
91022	4X4 Shock Mounts	2
91024	4X4 Body Mounts	2
91049	HD Ballstuds, 10mm	8
91050	Heavy Duty Ballstud, 12mm	8
91068	13mm Shock Cap Bushing	4
91098	4X4 Front Bumper Set	1

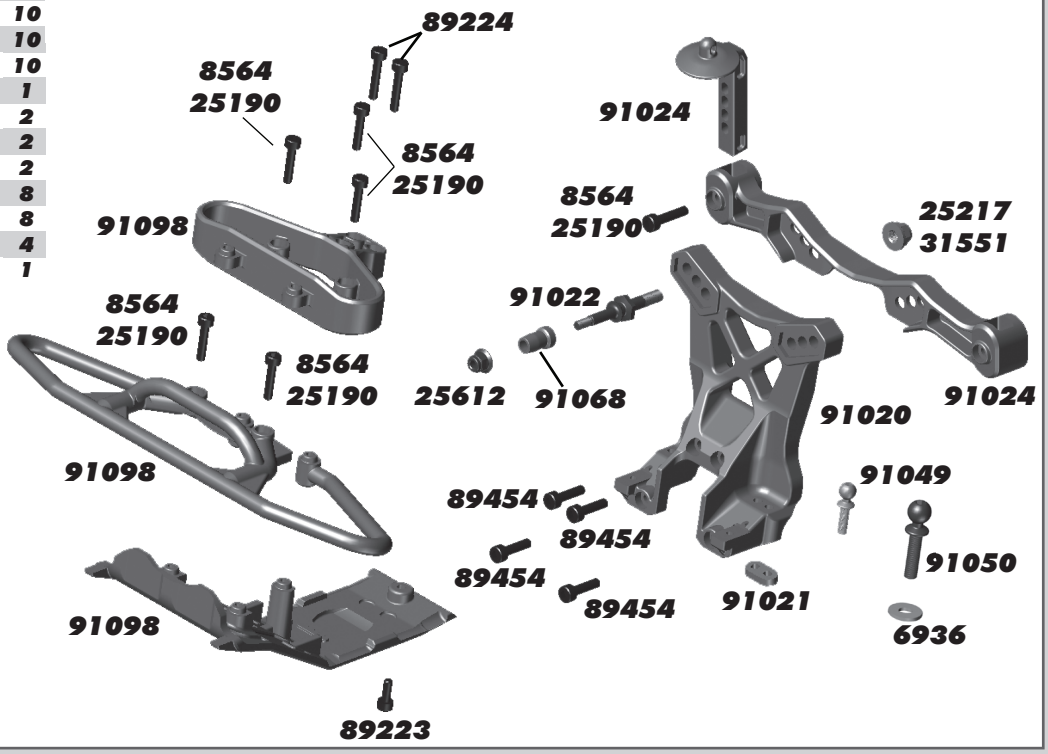

:: Front Clip

9630	Aluminum Ballstud Washer	10
25190	M3x14mm SHCS	20
25191	M3x18mm SHCS	20
25215	M3 Locknut, Black	20
25620	M3x10mm SHCS	20
89218	M3x8mm Washer	10
89224	M3x16mm SHCS	10
89226	M3x26mm SHCS	10
89454	M3x12mm SHCS	10
91004	4X4 Inner Body Mounts	1
91014	4X4 Front Chassis Plate/Brace	1
91029	4X4 Front Arm Mount (A)	1

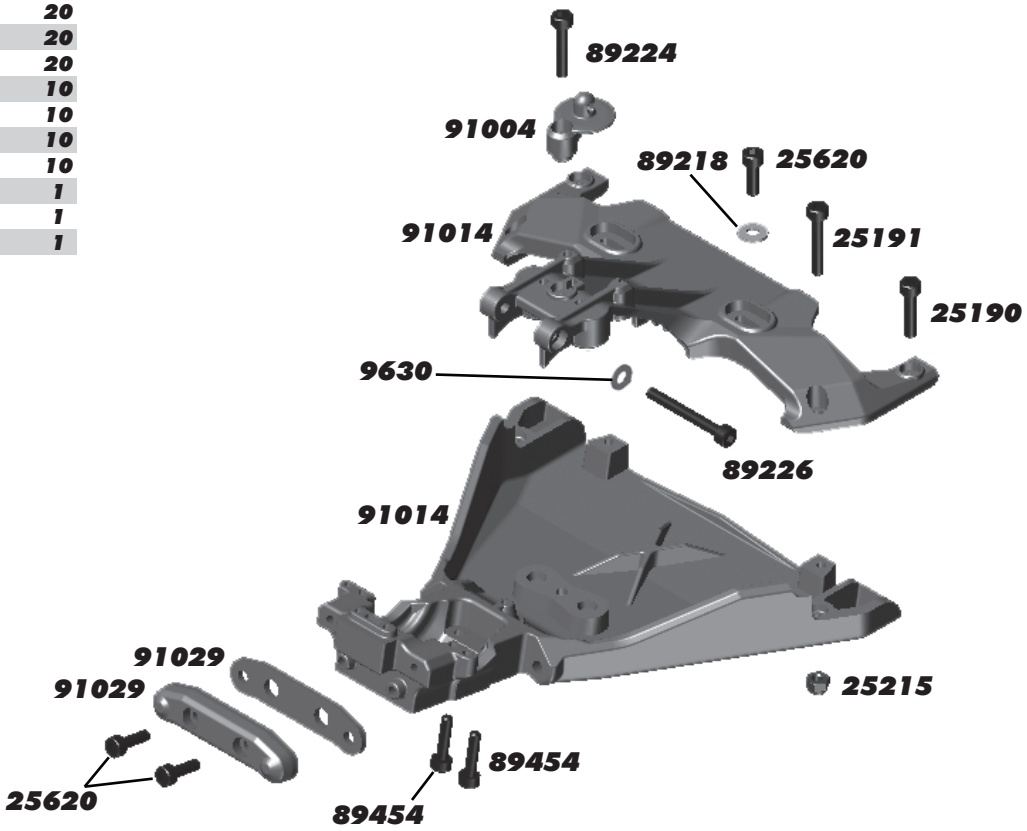

:: Front Suspension

8561	FT M3x8mm SHCS, aluminum	6
25187	M3x14mm BHCS	20
25215	M3 Locknut	20
25225	M3x3mm Setscrew	20
25238	6x12x4mm Bearings	2
31510	M2x4mm BHCS	6
89202	M3x12mm BHCS	10
89223	M3x8mm SHCS	10
91025	4X4 Front Arms	2
91026	4X4 Steer/Caster Block	2ea
91027	4X4 Wheel Hexes/Pins (RTR)	4
91028	4X4 Steel Hat Bushings	10
91030	Front Axle Crush Tube	2
91035	4X4 Inner Hinge Pins (RTR)	2ea
91040	4X4 Front CVA Bones	2
91042	4X4 CVA Axles	2
91043	4X4 CVA Pin Retainer (RTR)	2
91044	4X4 CVA Rebuild Kit	1
91048	HD Ballstuds, 8mm	8
91049	HD Ballstuds, 10mm	8
91069	Shock Mount Pin, Steel (RTR)	4
91127	FT TiN Front Inner Hinge Pin	2
91134	FT Shock Mount Pin, aluminum	4
91137	FT CVA Pin Retainer, aluminum	2
91148	M4 Locknuts Flange/Knurl	8
91171	4X4 Aluminum Wheel Hexes	4

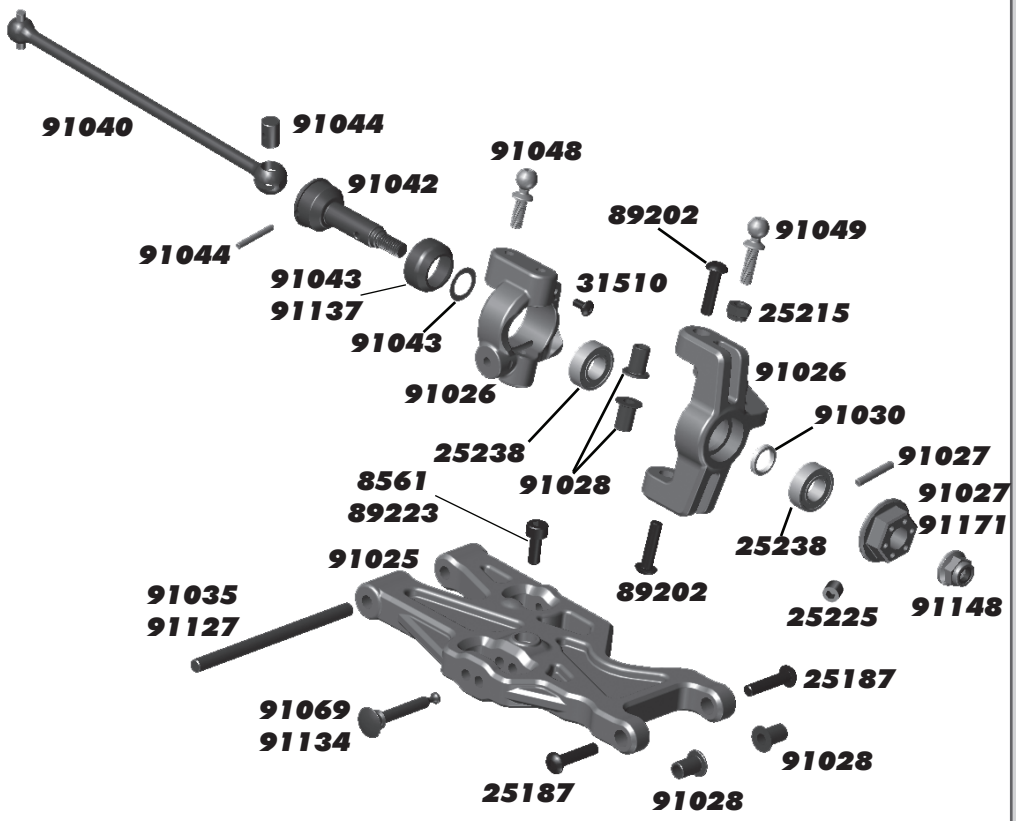

:: Front Gearbox

9630	Aluminum Ballstud Washer	10
25238	6x12x4 Bearings	2
31510	M2x4mm BHCS	6
89225	M3x24mm SHCS	10
91009	4X4 Front Gearbox	1
91010	4X4 Idler Gear	2
91011	4X4 Idler Gear Shaft (RTR)	1
91012	4X4 Top Shaft, Front (RTR)	1
91017	4X4 Top Shaft Spacers	2
91130	4X4 FT Lightweight Top Shaft, Front	1
91132	4X4 FT Idler Shaft, aluminum	2
91156	5x10x3mm Bearings	2

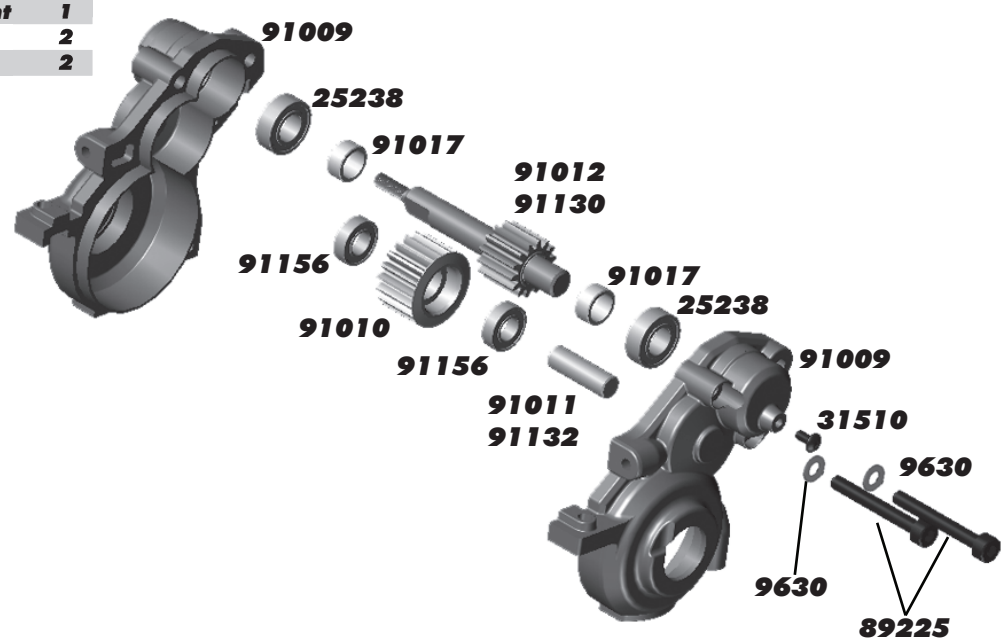

:: Front Belt Covers, Tensioners, Clicker Drive

25215	M3 Locknut, Black	20
25620	M3x10mm SHCS	20
31402	4x8mm Bearings	2
31531	M3x6mm BHCS	6
89223	M3x8mm SHCS	10
89528	M2.5x5mm washer	10
91013	4X4 Pulley/Clicker Set	1
91088	4X4 Belt Covers	1ea
91089	4X4 Belt Cover Cap	2
91091	Belt Tension Hardware	1
91158	M3x4mm BHCS	10
91159	M2.5x5mm SHCS	10
91167	4X4 Pulleys, Front & Rear	1ea

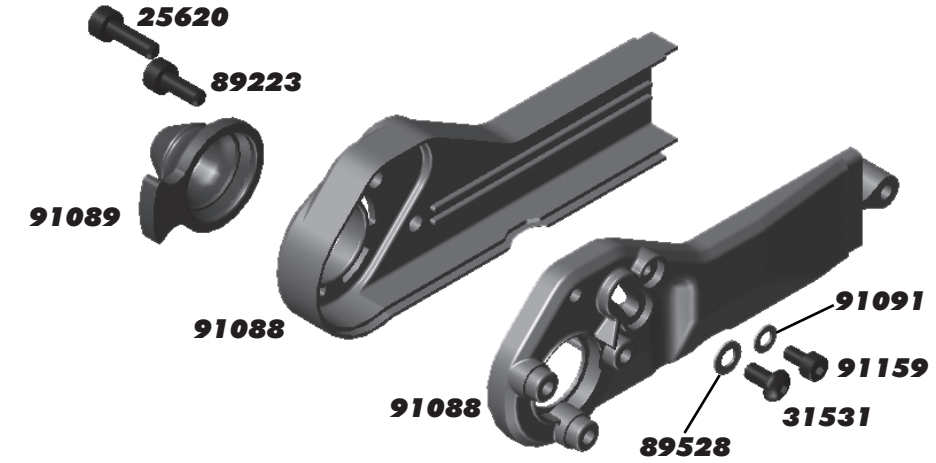

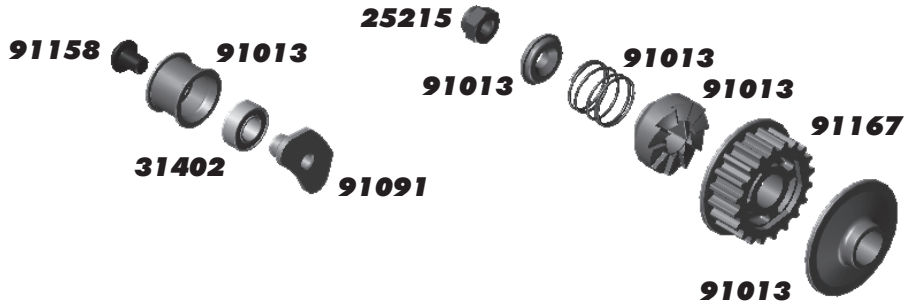

:: Belt, Center Belt Covers, Chassis Brace

8552	M3x8mm BHCS, aluminum	6
8553	M3x8mm FHCS, aluminum	6
9238	Foam Battery Spacers	2
25201	M3x8mm FHCS	20
25620	M3x10mm SHCS	20
31532	M3x8mm BHCS	6
89209	M3x18mm FHCS	10
89211	M3x26mm FHCS	10
89218	M3x8mm Washers	10
89454	M3x12mm SHCS	10
91085	4X4 Battery Strap	1
91088	4X4 Belt Covers	1ea
91093	4X4 Drive Belt	1
91152	4X4 ESC Tray/Battery Wall	1
91182	4X4 Chassis Brace Conversion	1
91183	4X4 Chassis Brace Mounts	1
91184	4X4 Carbon Chassis Brace (FT)	1

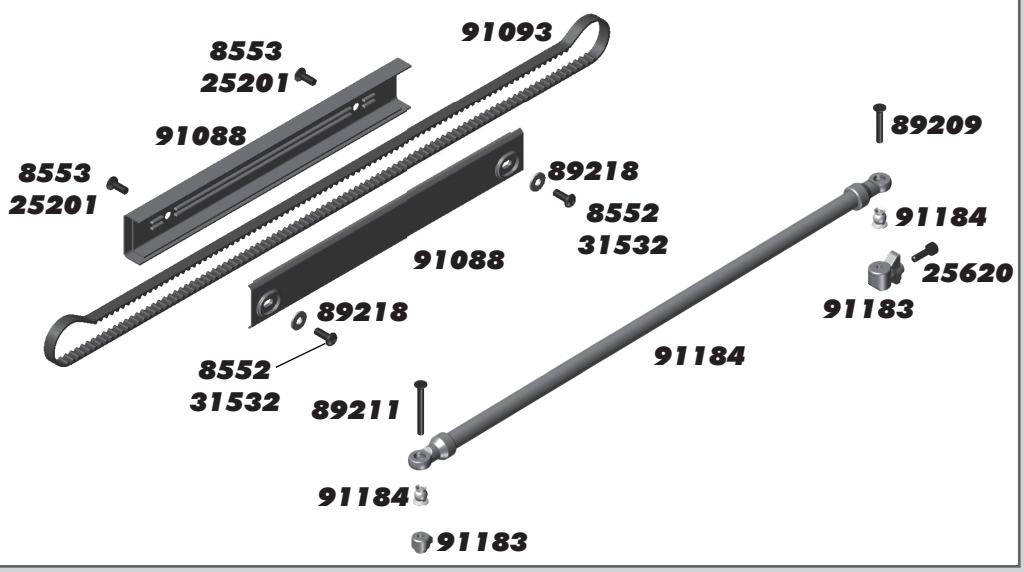

:: Chassis, Electronics Tray

25201	M3x8mm FHCS	20
89223	M3x8mm SHCS	10
89454	M3x12mm SHCS	10
91070	13mm Shock Bumpers	4
91083	4X4 Chassis	1
91084	4X4 Nerf Bars	1ea
91086	4X4 Receiver Box	1
91087	4X4 Reveiver Box Seals	1
91152	4X4 ESC Tray/Battery Wall	1

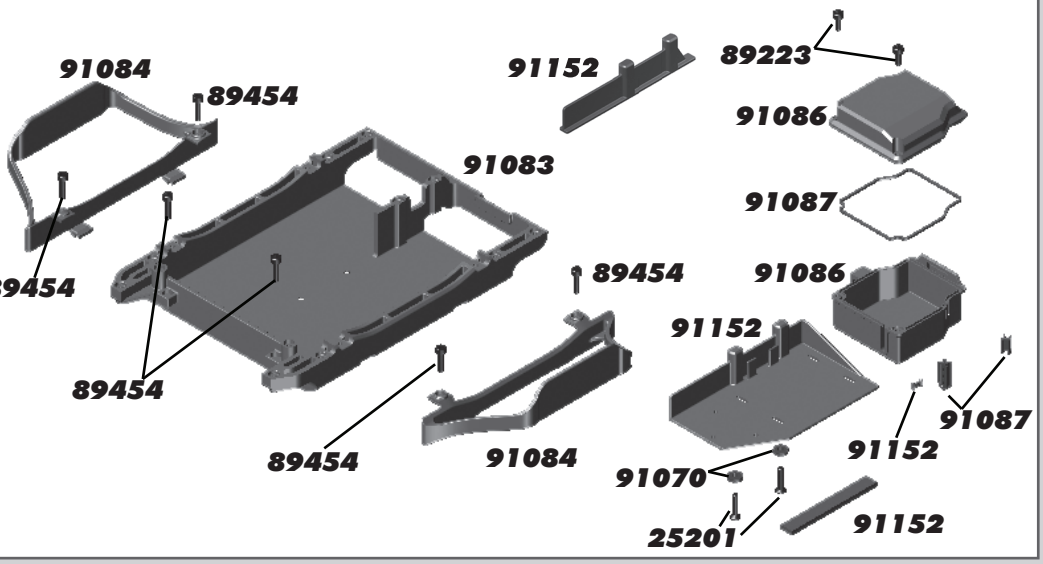

:: Battery Straps RTR / FT

4689	M3x16mm Setscrew	6
9238	Foam Battery Spacers	2
25202	M3x10mm FHCS	20
89208	M3x14mm FHCS	10
89454	M3x12mm SHCS	10
91085	4X4 Battery Strap (RTR)	1
91152	4X4 ESC Tray/Battery Wall (RTR)	1
91185	4X4 Saddle Pack Cradle (FT)	1
91186	4X4 Saddle Pack Foam (FT)	1
91187	4X4 Saddle Pack Battery Strap (FT)	1

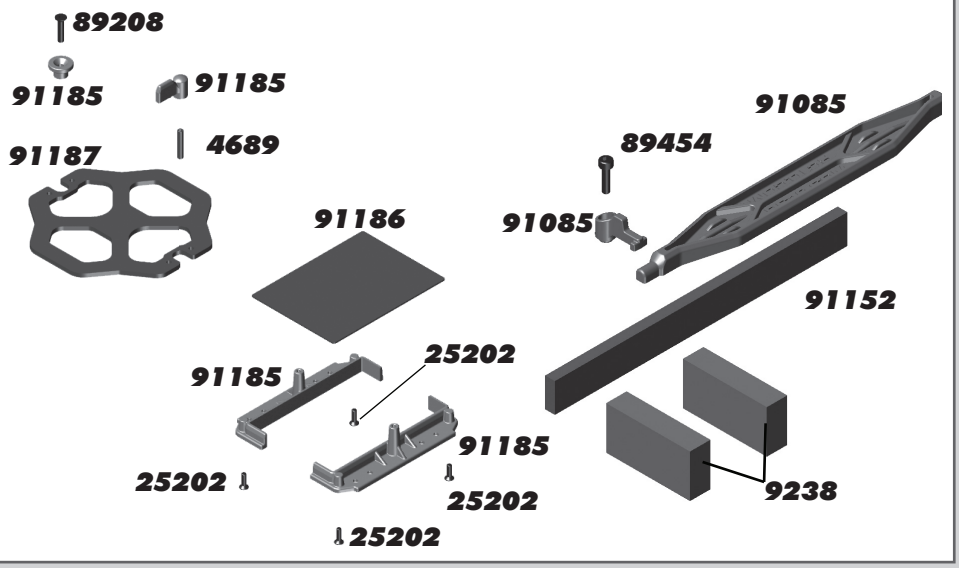

:: Slipper Gear Assembly / Pinions

7485	FT V2 Slipper Hubs	1
7486	V2 Slipper Spring/Washer	1
7732	M4x4mm Setscrew	6
9603	Slipper Pads	2
25216	M3 Locknut w/Flange	20
91090	4X4 Slipper Hardware	1
91092	4X4 Inner Slipper Hub	1
91094	Spur Gear, 32P-62T (Kit)	1
91095	Spur Gear, 32P-60T	1
91096	Spur Gear, 32P-58T	1
91097	Spur Gear, 48P-93T (Kit)	1
91161	5mm to 1/8 Pinion Adapter	1
91162	11T 32P Pinion Gear	1
91163	12T 32P Pinion Gear	1
91164	13T 32P Pinion Gear	1
91165	14T 32P Pinion Gear (RTR)	1
91166	15T 32P Pinion Gear	1
91167	4X4 Pulleys, Front & Rear	1ea

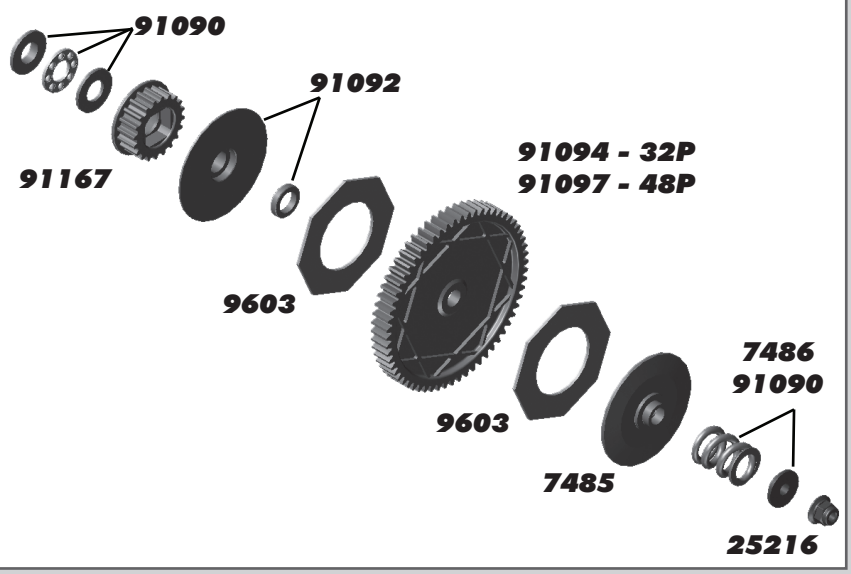

:: VTS Slipper Gear Assembly / Pinions

7486	FT V2 Slipper Spring and Washer	1
25216	M3 Locknut w/Flange	20
91175	VTS Slipper Conversion	1
91176	VTS Slipper Housing	1
91177	VTS Slipper Pads	2
91178	VTS Slipper Plate	1
91179	VTS Slipper Hub, Outer	1

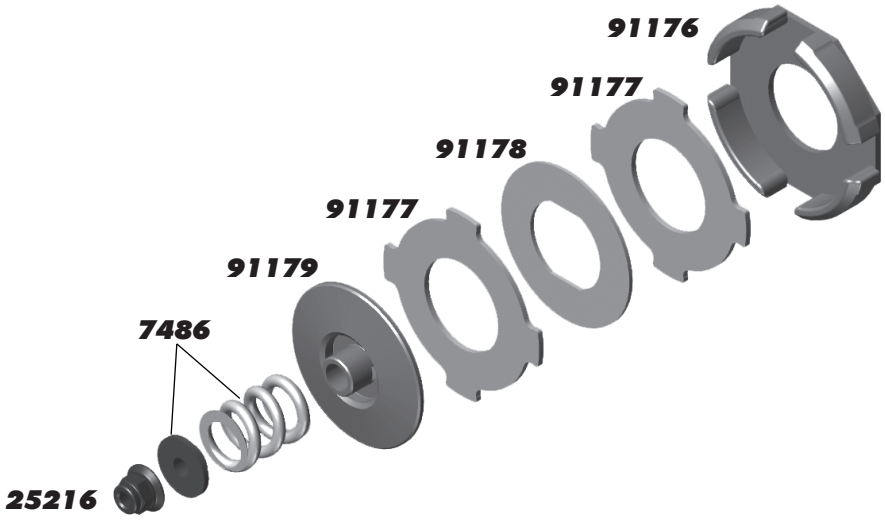

:: Swaybar Assembly

25225	M3x3mm Setscrew	20
89222	M2.5x8mm SHCS	10
89454	M3x12mm SHCS	10
91123	4X4 FT Front Swaybar Set	1
91124	4X4 FT Rear Swaybar Set	1
91126	4X4 FT Swaybar Hardware	1
91173	4X4 Swaybar Plastic Set	1

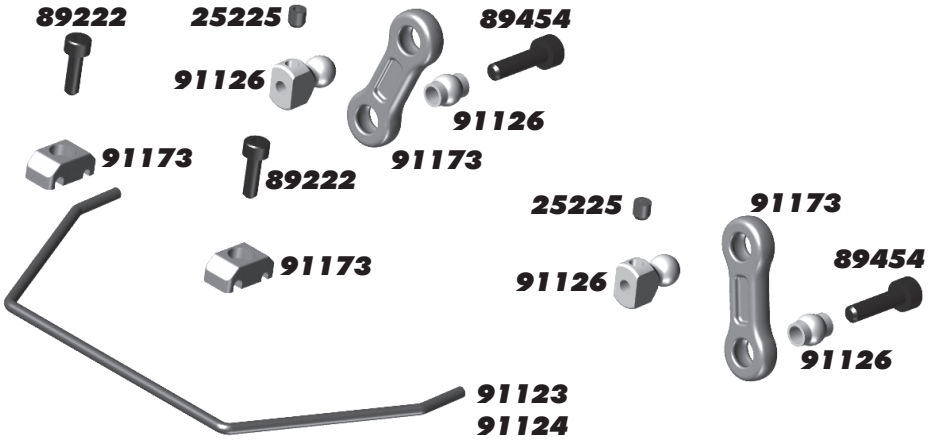

:: Motor Plate, Rear Belt Cover

8561	FT M3x8mm SHCS	6
8564	FT M3x14mm SHCS	6
25190	M3x14mm SHCS	20
25658	M3x6mm SHCS	20
31402	4x8mm Bearings	2
31531	M3x6mm BHCS	6
89223	M3x8mm SHCS	10
89528	Steel Washer 3x5.6mm	10
91013	4X4 Pulley/Clicker Set	1
91018	4X4 Motor Plate	1
91088	4X4 Belt Covers	1ea
91089	4X4 Belt Cover Caps	2
91091	Belt Tensioner Hardware	1
91158	M3x4mm BHCS	10
91159	M2.5x5mm SHCS	10

:: Rear Gearbox

9630	Aluminum Ballstud Washer	10
25238	6x12x4mm Bearings	2
31510	M2x4mm BHCS	6
89225	M3x24mm SHCS	10
91010	4X4 Idler Gear	2
91011	4X4 Idler Gear Shaft (RTR)	1
91015	4X4 Rear Gearbox	1
91017	4X4 Top Shaft Spacers (RTR)	2
91131	4X4 Lightweight Top Shaft, rear	1
91132	4X4 FT Idler Shaft, aluminum	2
91156	5x10x3mm Bearings	2
91180	4X4 Rear Top Shaft, works with coupled and de-coupled slipper hubs	1

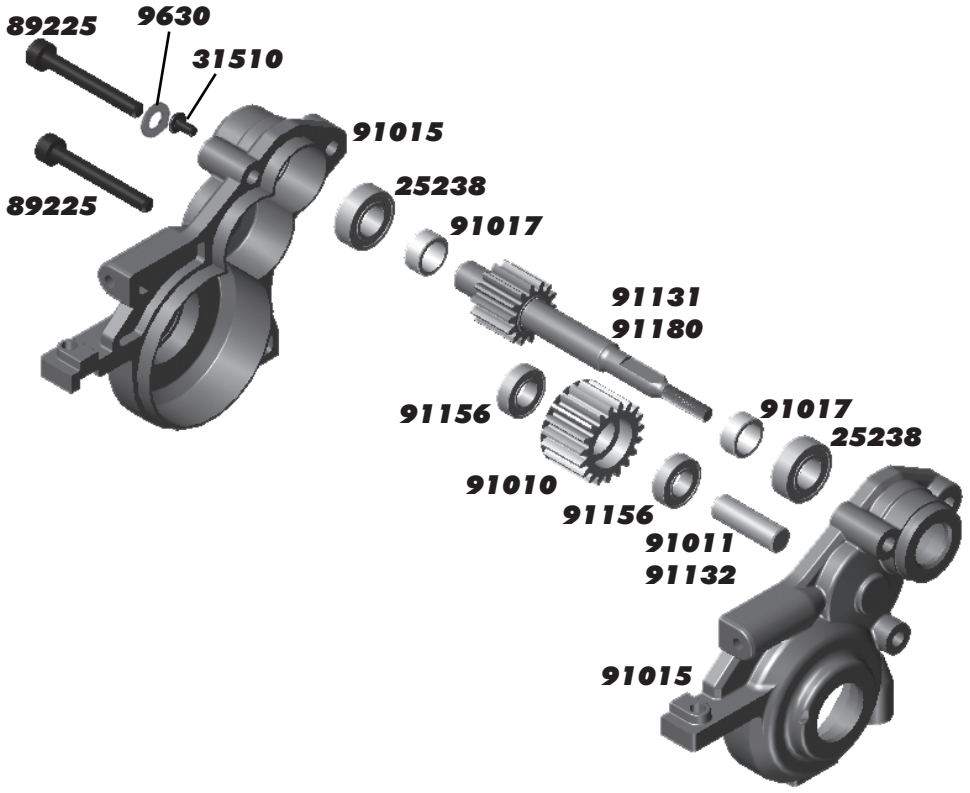

:: Rear Clip

6338	Antenna Tube 12" & Cap	1
9630	Aluminum Ballstud Washer	10
25190	M3x14mm SHCS	20
25191	M3x18mm SHCS	20
25215	M3 Locknut, Black	20
89219	M3x5mm Setscrew	10
89223	M3x8mm SHCS	10
89226	M3x26mm SHCS	10
89227	M3x28mm SHCS	10
89454	M3x12mm SHCS	10
91019	4X4 Rear Chassis Plate/Brace	1
91034	4X4 Rear Arm Mount (D)	1
91100	4X4 Rear Skid Plate	1

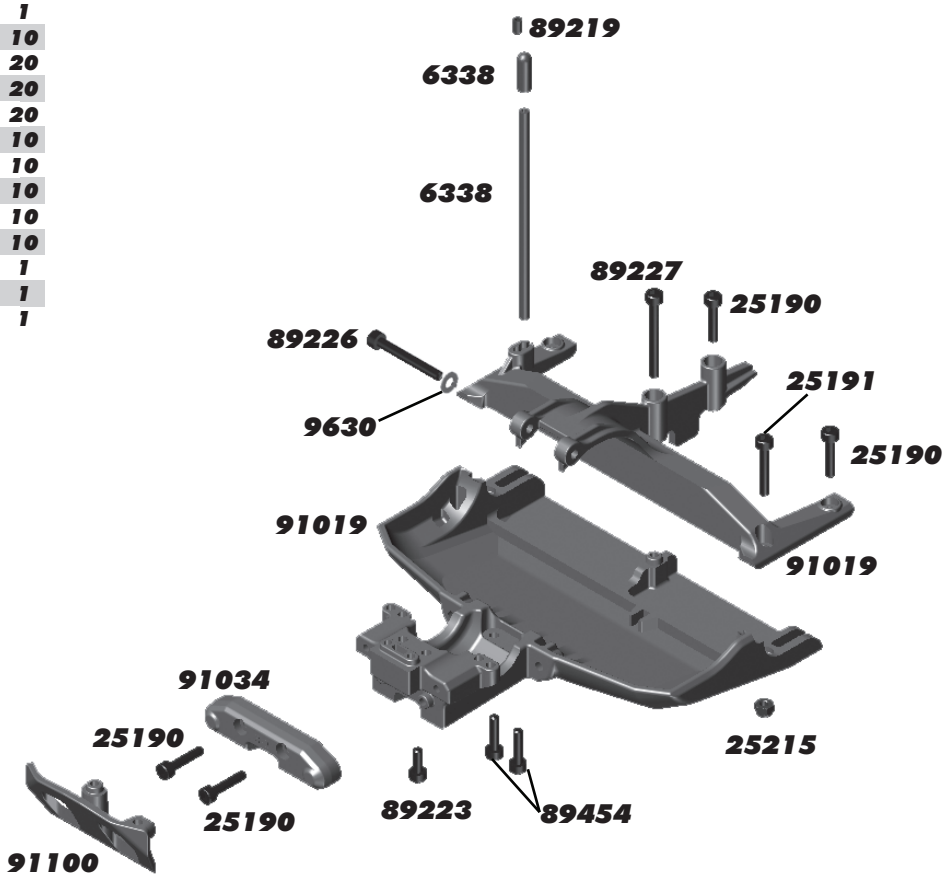

:: Rear Suspension

8561	FT M3x8mm SHCS	6
25215	M3 Locknut	20
25225	M3x3mm Setscrew	20
25238	6x12x4mm Bearings	2
89218	M3x8mm Washers	10
89223	M3x8mm SHCS	10
91027	4X4 Wheel Hexes/Pins (RTR)	4
91031	4X4 Rear Arms	1
91032	Rear Hub Carriers	1ea
91033	Rear Axle Crush Tube	2
91035	4X4 Inner Hinge Pins, Fr & Rr	2ea
91036	4X4 Rear Outer Hinge Pins	2
91037	Rear Hub Wheelbase Shim	8
91040	4X4 Rear CVA Bones	2
91042	4X4 CVA Axles	2
91044	4X4 CVA Rebuild Kit	2
91048	HD Ballstuds, 8mm	8
91069	Shock Mount Pin, Steel (RTR)	4
91128	FT TiN Rear Inner Hinge Pin	2
91134	FT Shock Mount Pin, aluminum	4
91148	M4 Locknuts Flange/Knurl	8
91155	12x18x4 Bearings, Rubber	2
91171	4X4 Aluminum Wheel Hexes	4

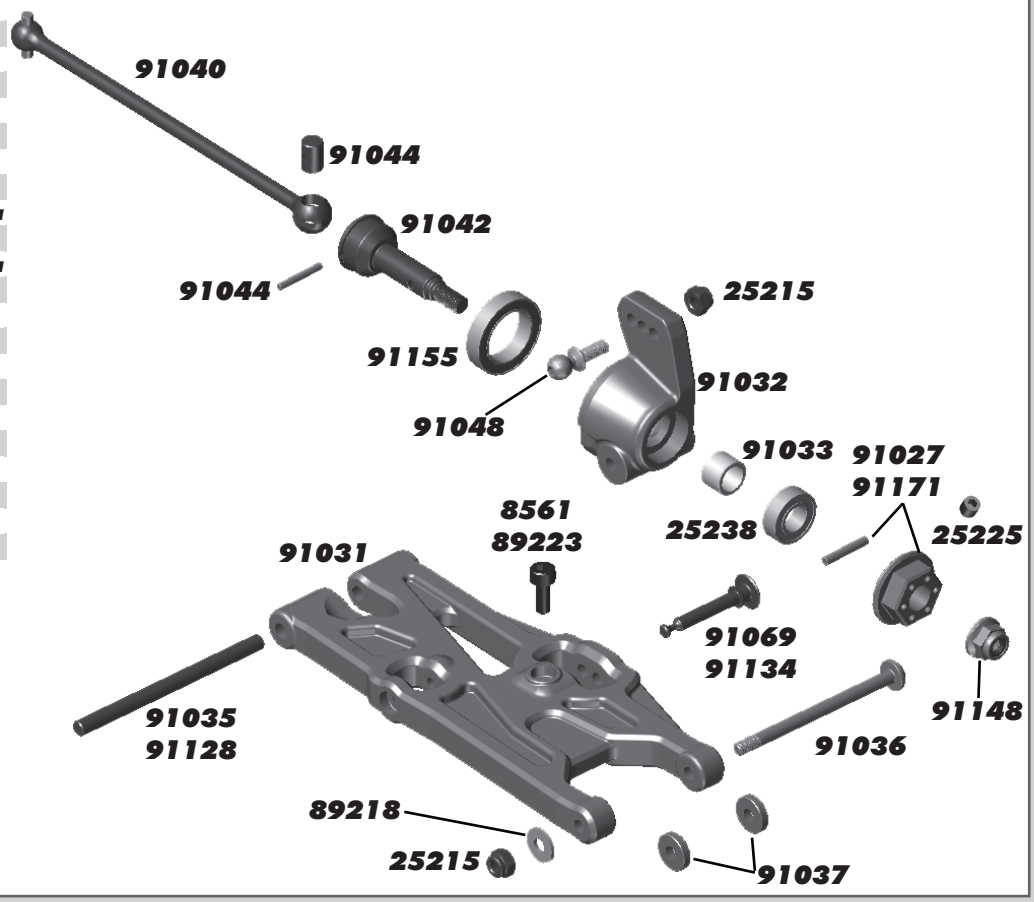

:: Rear Bumper, Rear Shock Tower

6936	Washers, aluminum	10
8552	FT M3x8mm BHCS, aluminum	6
8564	FT M3x14mm SHCS, aluminum	6
8565	FT M3x16mm SHCS, aluminum	6
25190	M3x14mm SHCS (RTR)	20
25215	M3 Locknut, Black	20
25217	M4 Locknut w/Flange (RTR)	20
25612	M3 Locknut w/Flange	20
25620	M3x10mm SHCS	20
31532	M3x8mm BHCS (RTR)	6
31551	M4 Flanged Locknut, aluminum	6
89218	M3x8mm Washers	10
89224	M3x16mm SHCS (RTR)	10
89227	M3x28mm SHCS	10
89430	Mud Flaps	2
89454	M3x12mm SHCS	10
91004	4X4 Inner Body Mounts	1ea
91021	4X4 Threaded Inserts	4
91022	4X4 Shock Mount	2
91023	4X4 Rear Shock Tower	1
91024	4X4 Body Mounts	4
91049	HD Ballstuds, 10mm	8
91050	HD Ballstuds, 12mm	8
91068	13mm Shock Cap Bushings	4
91099	4X4 Rear Bumper Set	1

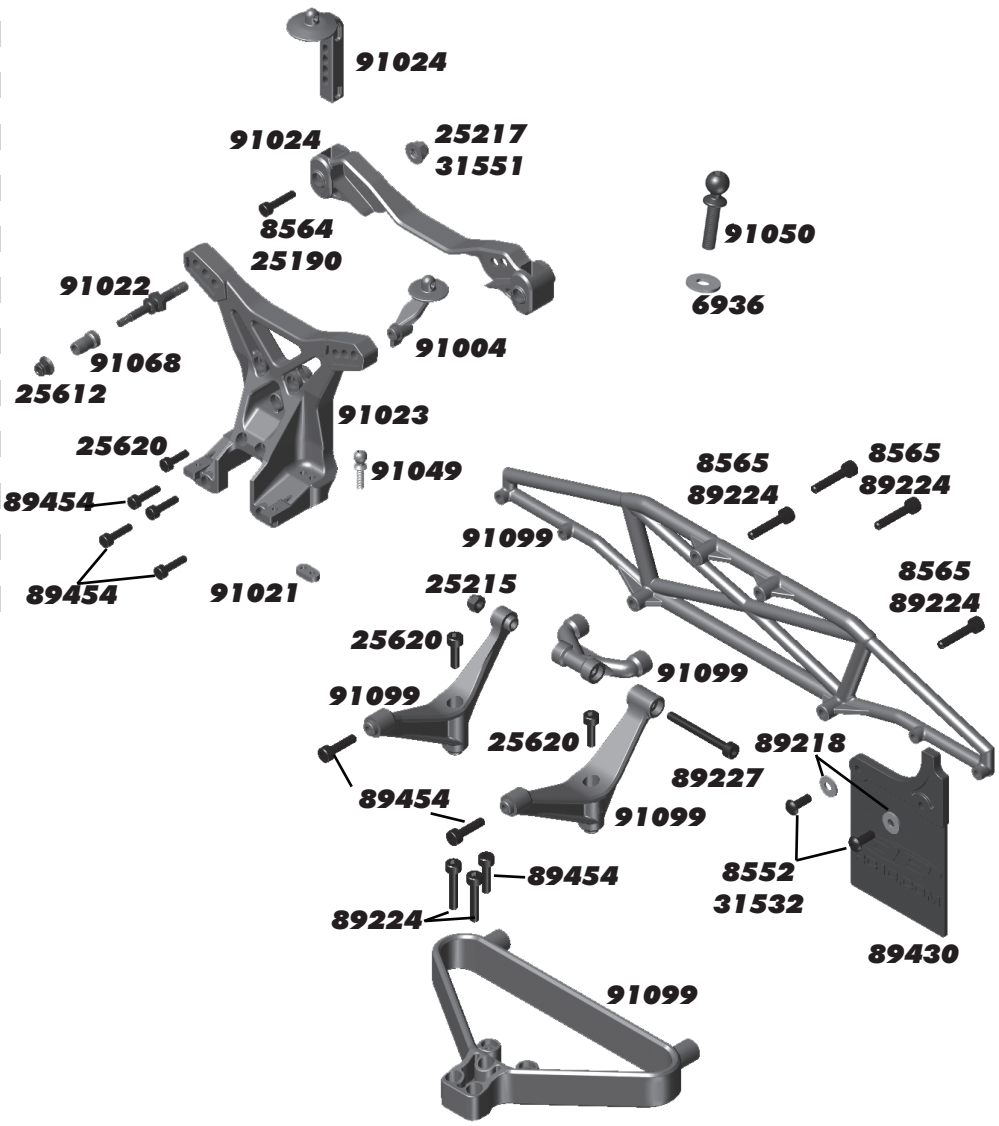

:: Wheels, Tires, Inserts

9809	SC10 Tires w/Foam Inserts	2
89413	1/8 Molded Tire Inserts	2
91101	KMC Hex Wheels, Black (Kit)	2
91102	KMC Hex Wheels, Silver	2
91103	KMC Hex Wheels, Chrome	2
91104	KMC Hex Wheels/Tire Black	2
91105	KMC Hex Wheels/Tire Silver	2
91106	KMC Hex Wheels/Tire Chrome	2

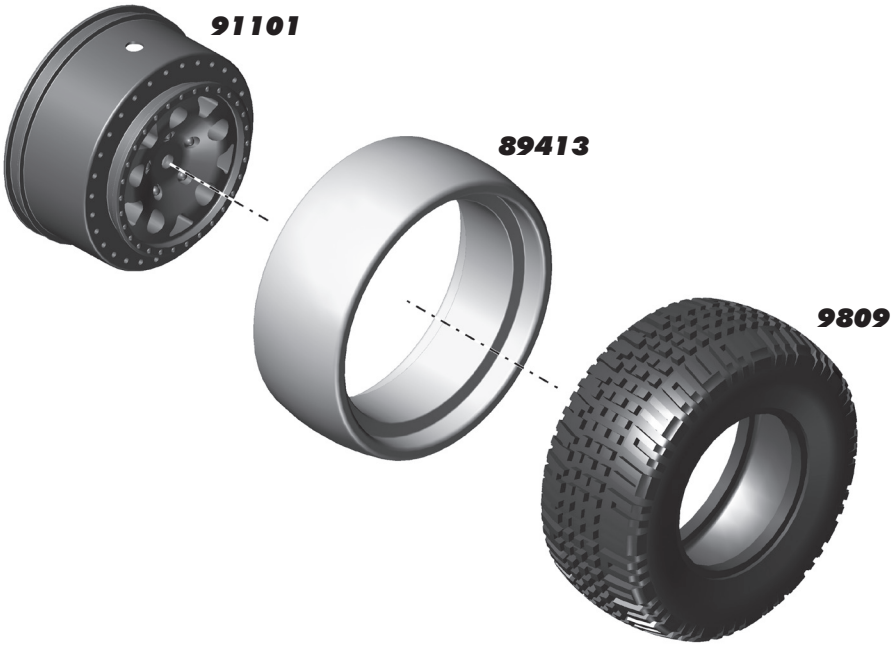

:: Factory Team and Option Parts

1654	FT Solid Axle Pins	4
1734	FT Body Clips, 4 Long, 6 Short	10
1735	FT Long Body Clips, Blue	4
1736	FT Short Body Clips, Blue	6
6943	FT Blue 8-32 Locknuts	4
7486	FT V2 Slipper Spring and Washer	1
7495	Vented Slipper Hub (fits outside only for 4X4)	2
8552	M3x8mm BHCS, Aluminum	6
8553	M3x8mm FHCS, Aluminum	6
8561	FT M3x8mm SHCS, Aluminum	6
8564	FT M3x16mm SHCS, Aluminum	6
8565	FT M3x16mm SHCS, Aluminum	6
9787	Chassis Protective Sheet	1
9836	SC10 Clear Body	1
9837	SC10 09' Championship Clear Body	1
9838	SC10 RTR Body, KMC	1
9839	SC10 RTR Body, Lucas Oil	1
9843	SC10 RTR Decal Sheet, KMC	1
9844	SC10 RTR Decal Sheet, Lucas Oil	1
9845	SC10 RTR Decal Sheet, Bullydog	1
9846	SC10 RTR Decal Sheet, Pro Comp	1
9847	SC10 RTR Decal Sheet, Team AE	1
9848	SC10 RTR Body, Ready Lift	1
9849	SC10 RTR Decal Sheet, Ready Lift	1
9862	SC10 09' Body, Rockstar-Makita	1
9863	SC10 09' Decals, Rockstar-Makita	1
25391	FT 4mm Locknuts, Blue	10
25392	FT 3mm Locknuts, Blue	10
31286	Aluminum Ballstud Washers, Blue	2
31550	M3 Aluminum Locknuts, Blue	6
31151	M4 Flanged Locknut, Aluminum	6
91108	FT 13x26mm Shock Kit, Hard	1
91109	FT 13x30mm Shock Kit, Hard	1
91110	FT 26mm Shock Body, Hard	2
91111	FT 30mm Shock Body, Hard	2
91112	Ti Nitride Shock Shaft, 26mm	2
91113	Ti Nitiride Shock Shaft, 30mm	2
91114	Blank Shock Pistons, 13mm	4
91115	Ti HD Turnbuckle, 65mm	2
91116	Ti HD Turnbuckle, 80mm	2
91117	Ti HD Turnbuckle Set, SC10 4X4	1
91118	Ti Nitride HD Ballstud 6mm	2
91119	Ti Nitride HD Ballstud 8mm	2
91120	Ti Nitride HD Ballstud 10mm	2
91121	Ti Nitride HD Ballstud 12mm	2
91122	Hard Anodized Hat Bushings	2
91123	Front Swaybar Set	1
91124	Rear Swaybar Set	1
91125	Hard Anodized Pivot Balls	4
91126	Swaybar Hardware	1
91127	Ti Nitride Front Inner Hinge Pins	2
91128	Ti Nitride Rear Inner Hinge Pins	2
91129	Light Weight Gear Diff Outdrives	2
91130	Light Weight Top Shaft, Front	1
91131	Light Weight Top Shaft, Rear	1
91132	Aluminum Idler Shaft	1
91134	Aluminum Shock Mount Pin	4
91135	Front CVA Bones, Shiny	2
91136	Rear CVA Bones, Shiny	2
91137	CVA Pin Retainer, Aluminum	2
91139	Titanium Shock Mounts	4
91160	Body Clip, 1.3mm Thick	10
91161	5mm to 1/8 Pinion Adapter	1
91168	SC10 4X4 Underbody	1
91169	SC10 4X4 Decal Sheet	1
91170	Hi -Torque Slipper Pad	2
91171	Aluminum Wheel Hexes/Pins	4
91172	SC10 4X4 Aluminum Screw Kit	1
91173	4X4 Swaybar Plastic Set	1
91175	VTS Slipper Conversion	1
91176	VTS Slipper Housing	1
91177	VTS Slipper Pads	2
91178	VTS Slipper Plate	1

:: Factory Team and Option Parts (cont.)

91179	VTS Slipper Hub, Outer	1
91181	4X4 Option Steering Rack	1
91183	4X4 Chassis Brace Mounts	1
91184	4X4 Chassis Brace	1
91185	4X4 Saddle Pack Cradle	1
91186	4X4 Saddle Pack Foam	1
91187	4X4 Saddle Pack Battery Strap	1

:: XP Electronics

29126	S2008MG Servo	1
29127	S2008MG Gear Set	1
29142	XP ESC Fan Option	1
29144	XP SC1200 Brushless ESC - (RTR)	1
29150	XP RX/TX Charger 110v	1
29166	XP DS1313 Digital Servo	1
29167	XP DS1015 Digital Servo	1
29209	Gear Set, DS1313	1
29210	Gear Set, DS1015	1
29211	Servo Case , DS1313 / DS1015	1
29212	Accessory Pack, DS1313 / DS1015	1
29221	XP3SS 2.4GHz Radio System	1
29222	TRS401SS 2.4GHz 4Ch Receiver	1

:: Reedy Motors and ESC's

909	550-SL Rotor	1
924	550-SL Brushless Motor 3500kV	1
925	550-SL Brushless Motor 4000kV	1
947	Sonic 540 6.5 Competition Brushless Motor	1
948	Sonic 540 5.5 Competition Brushless Motor	1
957	Sonic 540 Modified Rotor 12.2 x 25.0 (5.0)	1
958	Sonic 540 Modified Rotor 12.5 x 25.0 (5.0)	1
968	Sonic 550 4.0 Competition Brushless Motor	1
969	Sonic 550 4.5 Competition Brushless Motor	1
970	Sonic 550 5.0 Competition Brushless Motor	1
971	Sonic 550 5.5 Competition Brushless Motor	1
976	Sonic 550 Modified Rotor 12.5 x 40.5 (5.0)	1

:: Reedy Batteries

302	AA Alkaline 1.5V (4)	1
303	AA 2700mAh NiMH 1.2V Rechargeable	1
306	LiPo 60C 4000mAh 7.4V (short)	1
600	LiPo 65C 6500mAh 3.7V	1
601	LiPo 65C 6500mAh 7.4V	1
627	LiPo 60C 5200mAh 7.4V SP	1
628	LiPo 60C 5500mAh 7.4V	1
632	TX Lightweight Battery 1350mAh 11.1V	1
633	TX Battery - 3PK, M11 3000mAh 11.1V	1
634	TX Battery - Helios, Z1 2400mAh 11.1V	1
637	TX Battery - M11X 2500mAh 7.4V	1
730	Wolfpack LiPo 3000mAh 7.4V 25C w/DEANS®	1
731	Wolfpack LiPo 3300mAh 7.4V 35C w/DEANS®	1
732	Wolfpack LiPo 3400mAh 7.4V 35C w/DEANS®	1
733	Wolfpack LiPo 3700mAh 14.8V 35C w/DEANS®	1
734	Wolfpack LiPo 6500mAh 7.4V 25C w/DEANS®	1
735	Wolfpack LiPo 3900mAh 11.1V 35C w/DEANS®	1
736	Wolfpack LiPo 5000mAh 7.4V 25C	1

:: Reedy Accessories

604	526-S AC/DC 2S-6S LiPo/LiFe Charger	1
605	Motor Cooling Fans (2)	1
606	Charge Harness 2S Saddle Pack 4mm	1
607	Charge Harness 2S Standard Pack 4mm	1
609	Tam to DEANS® Charger Adapter	1
610	447-S AC/DC NiMH Peak Charger	1
651	Battery Bars (8)	1
652	Battery Bars (30)	1
653	Battery Bars (100)	1
654	4.0mm plugs (2M, 2F)	1
655	4.0mm plugs (2M, 10F)	1
656	4.0mm plugs (10F)	1
657	4.0mm plugs (100F)	1
658	4.0mm plugs (10M)	1
659	4.0mm plugs (30M)	1
660	3.5mm plugs (3M, 3F)	1
661	3.5mm plugs (10F)	1
662	3.5mm plugs (100F)	1
663	3.5mm plugs (10M)	1
664	3.5mm plugs (30M)	1
665	Single Cell Shrink - Clear (12)	1
666	Single Cell Shrink - Clear (30)	1
667	Single Cell Shrink - Clear (100)	1
716	Reedy 09 Decal Set	1
959	Sonic 540/550 Sensor w/Bearing	1
960	Sonic 540/550 Insulator Set (2 pcs.)	1
961	Sonic 540/550 Timing Cap w/Screws	1
962	Sonic 540 Case Screws (3 pcs.)	1
972	Sonic 540/550 Steel Bearing Set	1
973	Sonic 540/550 Ceramic Bearing Set	1
977	Sonic 550 Case Screws (3 pcs.)	1
SP417	Factory Team 1/10 Motor Storage Bag	1
SP418	Factory Team 1/10 Car Carrier Bag	1

:: Apparel

SP35**	Reedy 09' White T-Shirt (M, L, XL, 2XL, 3XL)	1
SP36**	Reedy 09' Black T-Shirt (M, L, XL, 2XL, 3XL)	1
SP62**	AE Vertigo Long Sleeve T-Shirt (S, M, L, XL, 2XL)	1
SP63**	AE Vertigo White T-Shirt (S, M, L, XL, 2XL, 3XL, 4XL)	1
SP64**	AE Vertigo Blue T-Shirt (S, M, L, XL, 2XL, 3XL, 4XL)	1
SP65**	AE Vertigo Black T-Shirt (S, M, L, XL, 2XL, 3XL, 4XL)	1
SP66**	AE Stencil Blue T-Shirt (S, M, L, XL, 2XL, 3XL, 4XL)	1
SP67**	AE Stencil Gray Sweatshirt (S, M, L, XL, 2XL, 3XL)	1
SP69**	AE 26 Time World Championship T-Shirt, Black (S, M, L, XL, 2XL, 3XL)	1
SP70**	Associated Windbreaker (S, M, L, XL, 2XL, 3XL)	1
SP71**	Associated Winter Jacket (S, M, L, XL, 2XL)	1
SP411S	AE Hat 11' Flatbill Black S/M	1
SP411L	AE Hat 11' Flatbill Black L/XL	1
SP413S	26 Time World Championship Hat S/M	1
SP413L	26 Time World Championship Hat L/XL	1
SP416	1/10 Car Carrier Bag Only	1
SP417	1/10 FT Motor Bag	1
SP420**	AE Pit Gloves (M, L, XL)	Pr.
715	Reedy 2009 Track Banner	1
110684	Team Associated Track Banner	1

** Use part number plus the desired size when ordering!

:: LRP Speed Controls

LRP80705	SPX Zero	1
LRP80905	SXX Comp v.2 Speed Control	1
LRP80915	SXX Stock-Spec v.2	1
LRP80955	SXX TC-Spec v.2 Speed Control	1

:: LRP Brushless Motors

LRP50430	Vector K4 6.5 Turn	1
LRP50440	Vector K4 8.5 Turn	1
LRP50450	Vector K4 10.5 Turn	1
LRP50460	Vector K4 13.5 Turn	1
LRP50480	Vector K4 17.5 Turn	1
LRP50642	Vector X-12 9.5 Turn	1
LRP50652	Vector X-12 8.5 Turn	1
LRP50653	Vector X-12 OCTA Wind 8.5 Turn	1
LRP50662	Vector X-12 7.5 Turn	1
LRP50672	Vector X-12 6.5 Turn	1
LRP50673	Vector X-12 OCTA Wind 6.5 Turn	1
LRP50682	Vector X-12 5.5 Turn	1
LRP50683	Vector X-12 OCTA Wind 5.5 Turn	1
LRP50687	Vector X-12 5.0 Turn	1
LRP50688	Vector X-12 OCTA Wind 5.0 Turn	1
LRP50691	Vector X-11 4.5 Turn	1
LRP50692	Vector X-12 4.5 Turn	1
LRP50693	Vector X-12 OCTA Wind 4.5 Turn	1
LRP50701	Vector X-11 4.0 Turn	1
LRP50702	Vector X-12 4.0 Turn	1
LRP50712	Vector X-12 3.5 Turn	1
LRP50722	Vector X-12 3.0 Turn	1
LRP50832	Vector X-12 Stockspec 10.5 Turn	1
LRP50842	Vector X-12 Stockspec 13.5 Turn	1
LRP50852	Vector X-12 Stockspec 17.5 Turn	1
LRP50862	Vector X-12 Stockspec 21.5 Turn	1

:: LRP Misc.

LRP50620	X-12 Replacement Ball Bearings	1
LRP50621	X-12 Optional Ceramic Ball Bearings	1
LRP50622	X-12 Small Parts Set	1
LRP50623	X-12 PreciSensor Unit	1
LRP50624	X-12 Replacement Aluminum Front Can	1
LRP50625	X-12 Lightweight Aluminum Can	1
LRP50626	X-12 Alum Rear Cover	1
LRP50632	X-12 12.0mm Sintered Rotor	1
LRP50633	X-12 12.5mm Sintered Rotor	1
LRP50634	X-12 13.0mm Sintered Rotor	1
LRP50635	X-12 Stock Spec Rotor 12.45mm	1
LRP50636	Works Team X-12 12.0mm Rotor	1
LRP50637	Works Team X-12 12.5mm Rotor	1
LRP50638	Works Team X-12 13.0mm Rotor	1
LRP50639	X-12 Stock Spec 1S LiPo Rotor	1
LRP64790	LRP Motor Bearing Puller	1
LRP80135	BEC Stabilizing Capacitor	1
LRP819307	70mm High Flex Sensor Wire	1
LRP819310	100mm High Flex Sensor Wire	1
LRP819315	150mm High Flex Sensor Wire	1
LRP819320	200mm High Flex Sensor Wire	1
LRP82512	SXX Low Profile Fan	1
LRP82520	Brushless/Brushed Cooling Set	1
LRP82521	Gun Metal Cooling Set	1
LRP82530	SXX Power Cap 3.7-4.8V	1
LRP82531	SXX Power Cap 6.0-7.4V	1

:: LRP Brushless Combos

LRP80673	SXX SS / 10.5T SS	1
LRP80674	SXX SS / 13.5T SS	1
LRP80675	SXX SS / 17.5T SS	1
LRP80677	SXX SS v.2 / 10.5T SS	1
LRP80678	SXX SS v.2 / 13.5T SS	1
LRP80679	SXX SS v.2 / 17.5T SS	1
LRP80680	SXX SS v.2 / 21.5T SS	1
LRP80694	SXX Comp v.2 / X-12 5.0T	1
LRP80695	SXX Comp v.2 / X-12 5.5T	1
LRP80696	SXX Comp v.2 / X-12 6.5T	1
LRP80697	SXX Comp v.2 / X-12 7.5T	1
LRP80698	SXX Comp v.2 / X-12 8.5T	1
LRP80699	SXX Comp v.2 / X-12 9.5T	1
LRP80790	SXX TC v.2 / X-12 3.0T	1
LRP80791	SXX TC v.2 / X-12 3.5T	1
LRP80792	SXX TC v.2 / X-12 4.0T	1
LRP80793	SXX TC v.2 / X-12 4.5T	1
LRP80794	SXX TC v.2 / X-12 5.0T	1
LRP80795	SXX TC v.2 / X-12 5.5T	1
LRP80796	SXX TC v.2 / X-12 6.5T	1
LRP80797	SXX TC v.2 / X-12 7.5T	1
LRP80798	SXX TC v.2 / X-12 8.5T	1
LRP80799	SXX TC v.2 / X-12 9.5T	1
29225	Sonic 9.5T / SXX Comp v.2	1
29226	Sonic 8.5T / SXX Comp v.2	1
29227	Sonic 7.5T / SXX Comp v.2	1
29228	Sonic 6.5T / SXX Comp v.2	1
29229	Sonic 5.5T / SXX Comp v.2	1
29230	Sonic 5.0T / SXX Comp v.2	1
29231	Sonic 4.5T / SXX Comp v.2	1
29234	Sonic 21.5T / SXX SS v.2	1
29235	Sonic 17.5T / SXX SS v.2	1
29236	Sonic 13.5T / SXX SS v.2	1
29237	Sonic 10.5T / SXX SS v.2	1
29238	Sonic 9.5T / SXX TC v.2	1
29239	Sonic 8.5T / SXX TC v.2	1
29240	Sonic 7.5T / SXX TC v.2	1
29241	Sonic 6.5T / SXX TC v.2	1
29242	Sonic 5.5T / SXX TC v.2	1
29243	Sonic 5.0T / SXX TC v.2	1
29244	Sonic 4.5T / SXX TC v.2	1
29245	Sonic 4.0T / SXX TC v.2	1
29246	Sonic 3.5T / SXX TC v.2	1

:: LRP Charger, Power Supply, Balancer, Iron

LRP41281	Quadra Pro 2 Charger	1
LRP41552	Pulsar Competition 3 Charger	1
LRP41555	Pulsar Touch Charger	1
LRP42103	LiPo Balance Board XH	1
LRP42104	LiPo Balance Board FP/TP	1
LRP42105	LiPo Balance Board PQ	1
LRP42305	Temp. Sensor for Pulsar Touch	1
LRP42306	Sensor Wire Splitter	1
LRP43150	Power Supply Competition	1
LRP45200	LiPo Parallel Balancer	1
LRP65800	High Power Solder Station	1
LRP65802	Soldering Tip 5mm	1
LRP65803	Soldering Tip 1.2mm	1
LRP65804	Soldering Handle	1
LRP81800	LRP Speedo Updater	1

:: 1/18 Kits and RTR's

20100	RC18T RTR (ready-to-run)	1
20101	RC18T2 2.4ghz RTR (ready-to-run)	1
20103	RC18B2 - RC18T2 Team Kit	1
20104	RC18T2 Brushless RTR (ready-to-run)	1
20105	RC18B RTR (ready-to-run)	1
20106	RC18B2 2.4ghz RTR (ready-to-run)	1
20108	RC18B2 Brushless RTR (ready-to-run)	1
20110	RC18MT RTR (ready-to-run)	1
20115	RC18R Kamino RTR (ready-to-run)	1
20118	RC18R Niteline RTR (ready-to-run)	1
20121	SC18 Brushless RTR (ready-to-run)	1
20130	RC18LM RTR (ready-to-run)	1

:: 1/12, 1/10 Kits and RTR's

2033	FT Nitro TC3 Kit	1
2042	Nitro TC3 RTR Plus (ready-to-run)	1
4019	FT 12R5.1 Kit	1
7020	RC10T4 Team Truck Kit	1
7023	RC10T4.1 FT Kit	1
7029	SC10 Associated/RC10.com Truck RTR (ready-to-run)	1
7030	SC10 KMC Wheels Race Truck RTR (ready-to-run)	1
7032	SC10 Ready Lift RTR (ready-to-run)	1
7034	SC10 FT Kit	1
7037	RC10T4.1 RTR 2.4GHz Brushless (ready-to-run)	1
7046	SC10 RS RTR, 2.4ghz Brushless Lucas Oil Body	1
7047	SC10 RS RTR, 2.4ghz Brushless Monster Energy Body	1
7048	SC10 RS RTR, 2.4ghz Brushless Pro Comp Body	1
7049	SC10 RS RTR, 2.4ghz Brushless Rockstar/Makita Body	1
7080	FT GT2 Nitro Truck Kit	1
7092	GT2 RS Truck Nitro RTR (ready-to-run)	1
8020	FT RC10R5 Kit	1
8021	FT RC10R5-OVAL Kit	1
9034	RC10B4 Buggy Team Kit	1
9036	RC10B4.1 FT Kit	1
9039	RC10B4.1 RTR 2.4GHz Brushless (ready-to-run)	1
9061	FT B44.1 4WD Buggy Kit	1
30106	FT TC6 4WD Touring Car Kit	1
30107	FT TC6.1 4WD Touring Car Kit	1
30111	TC4 4WD Touring Car RTR (ready-to-run)	1
90004	SC10 4x4 Kit	1
90005	SC10 4x4 Lucas Oil RTR (ready-to-run)	1
90006	SC10 4x4 Pro Comp RTR (ready-to-run)	1
90007	SC10 4x4 Rockstar/Makita RTR (ready-to-run)	1
90010	SC10 4x4 FT Kit	1

:: 1/8 Kits and RTR's

20503	Limited Edition MGT 4.60 Nitro RTR, w/flag body (ready-to-run)	1
20504	Limited Edition MGT 8.0 Nitro RTR, w/flag body (ready-to-run)	1
80904	FT RC8Be Electric Buggy Kit	1
80905	RC8RS "Race Spec" Nitro Buggy RTR (ready-to-run)	1
80906	RC8.2 FT Nitro Buggy Kit	1
80907	RC8.2e FT Electric Buggy Kit	1
80912	RC8T Championship Edition	1
80922	SC8 Short Course Race Truck, KMC Wheels Nitro RTR (ready-to-run)	1
80923	SC8 Short Course Race Truck, Bully Dog Nitro RTR (ready-to-run)	1
80924	SC8 Short Course Race Truck, AE Team Nitro RTR (ready-to-run)	1
80925	SC8 Short Course Race Truck, Pro Comp Nitro RTR (ready-to-run)	1
80932	SC8e Short Course Race Truck Rockstar/Makita RTR (ready-to-run)	1

:: Tools

1111	FT Turnbuckle Wrench	1
1112	FT 4mm Turnbuckle Wrench (4x4 only)	1
1449	Offroad Ride Height Gauge	1
1450	FT Ride Height Gauge	1
1541	FT Hex Driver Set, (7 pcs)	1
1542	FT .050" Silver Hex Driver	1
1543	FT 1/16" Black Hex Driver	1
1544	FT 1.5mm Purple Hex Driver	1
1545	FT 5/64" Blue Hex Driver	1
1546	FT 3/32" Gold Hex Driver	1
1547	FT 2.5mm Green Hex Driver	1
1548	FT 3mm Red Hex Driver	1
1551	FT Screwdriver Set	1
1553	FT Phillips Silver Screwdriver	1
1554	FT Silver Spring Hook Tool	1
1561	FT Nut Driver Set, (6 pcs)	1
1562	FT 3/16" Black Nut Driver	1
1563	FT 1/4" Red Nut Driver	1
1564	FT 5.5mm Red Nut Driver	1
1565	FT 11/32" Green Nut Driver	1
1566	FT 7.0mm Silver Nut Driver	1
1567	FT 8mm Gold Nut Driver	1
1589	FT 5/64" Blue Ball Hex Driver	1
1590	FT 3/32" Gold Ball Hex Driver	1
1592	FT Ball Hex Driver Set, (3 pcs)	1
1655	FT 8-Piece 1/4" Hex Drive Set	1
1656	FT 1/4" Hex Drive Handle, without tips	1
1657	FT 1/4" Hex Drive .050" Tip	1
1658	FT 1/4" Hex Drive 1/16" Tip	1
1659	FT 1/4" Hex Drive 5/64" - 2.0mm Tip	1
1660	FT 1/4" Hex Drive 3/32" Tip	1
1661	FT 1/4" Hex Drive 1.5mm Tip	1
1662	FT 1/4" Hex Drive 2.5mm Tip	1
1663	FT 1/4" Hex Drive 3/16" Nut Driver Tip	1
1664	FT 1/4" Hex Drive 1/4" Nut Driver Tip	1
1665	FT 1/4" Hex Drive 11/32" Nut Driver Tip	1
1666	FT 1/4" Hex Drive 5.5mm Nut Driver Tip	1
1667	FT 1/4" Hex Drive 7.0mm Nut Driver Tip	1
1668	FT 1/4" Hex Drive 8.0mm Nut Driver Tip	1
1669	FT 1/4" Hex Drive 5/64" - 2.0mm Ball End Tip	1
1670	FT 1/4" Hex Drive 3/32" Ball End Tip	1
1671	FT 1/4" Hex Drive Standard Screwdriver Tip	1
1672	FT 1/4" Hex Drive Phillips Screwdriver Tip	1
1673	FT 1/4" Hex Drive 2.5mm Ball End Tip	1
1674	FT 1/4" 5 Piece Power Tool Tips Set (5/64-2.0mm, 1.5mm, 2.5mm, 5/64"- 2.0mm ball, 2.5mm ball)	1
1719	FT Camber + Track Width Tool	1
1737	FT Body Scissors	1
3718	12 Inch Nylon Wire Ties	12
3719	6 Inch Nylon Wire Ties	12
3720	8 Inch Nylon Wire Ties	12
3987	FT Droop Gauge	1
6429	Shock Building Tool	1
6956	Molded Tools, Set	1
7494	V2 Stamped Multi Tool	1
7709	4 Inch Nylon Wire Ties	12
91107	13mm Shock Tools	1

Associated Electrics, Inc.
26021 Commercentre Drive
Lake Forest, CA 92630-8853 USA
http://www.TeamAssociated.com
http://www.RC10.com
http://twitter/Team Associated
http://bit.ly/AEonFacebook

call: (949) 544-7500 fax: (949) 544-7501

Check out the following web sites for all of our electric kits, current products, new releases, setup help, tips, and racing info!
www.TeamAssociated.com. - www.RC10.com

:: Notes

:: Notes


RC10.COM
World Champion R/C Cars
TEAM ASSOCIATED
51
RC10.COM
SC10
4x4
REEDY
RC10.COM
RC10.COM
World Champion R/C Cars
KICKER
makita
INDUSTRIAL POWER TOOLS
AREA 51
DESIGN WORKS
TEAM ASSOCIATED
XP
SIGNPROS

SC10 4x4 Short Course Setup Sheet

Driver: SC10 4X4 FT Setup
Date:
Track:
Event:
Conditions:
Rev.3

Front Suspension

Steering Rack
Standard ☐
Option ■

Washers: 0

Bumpsteer Washers: 0

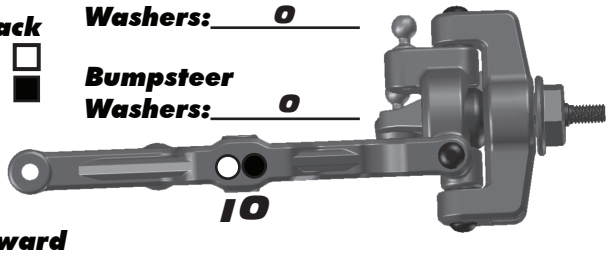

Option Rack
Forward
Back

Steering Stop Gap: _____

Anti Roll Bar:

1.5mm ☐
1.8mm ☐
2.0mm ■
2.2mm ☐
None ☐

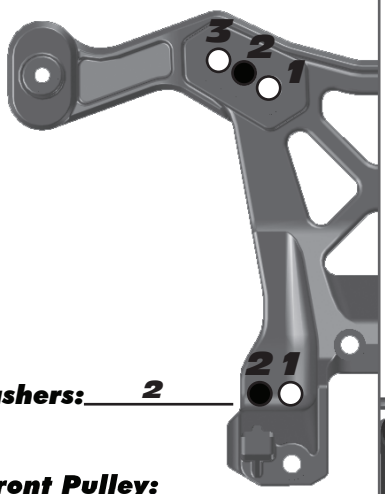

Camber: -1

Toe: 0

Ride Height: 27mm

Washers: 2

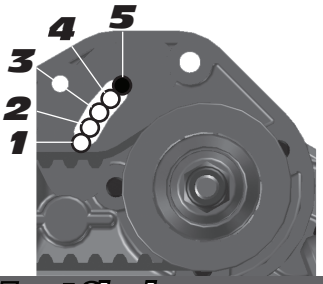

Front Pulley:
20T (standard) ■
19T (overdrive) ☐

Clicker: ☐ _____
Full Time 4X4: ☐

Rear Suspension

Wheelbase:
Long ☐
Medium ■
Short ☐

Anti Roll Bar:

1.5mm ☐
1.8mm ■
2.0mm ☐
2.2mm ☐
None ☐

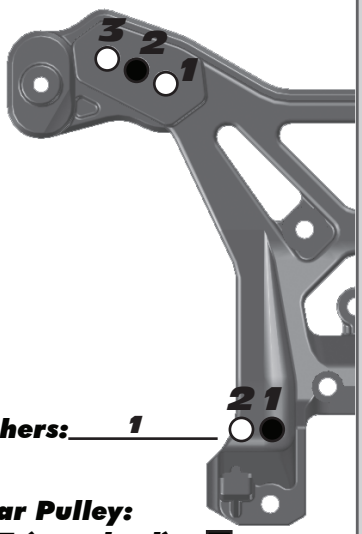

Camber: -1

Ride Height: 27mm

Toe Block: 3-2 ■
3-3 ☐

Washers: 1

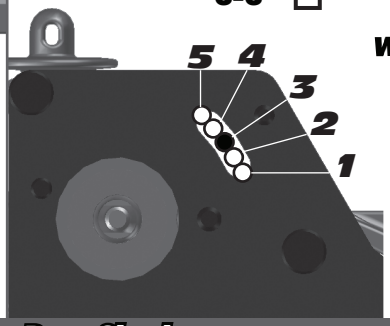

Rear Pulley:
20T (standard) ■
19T (underdrive) ☐

Slipper Coupled ☐
Slipper De-Coupled ■

Front Shocks

Spring: Yellow 4.8lb
Piston: 1.2
Shock Fluid: 35 wt
Limiter: 0
Rebound: _____
Bladder ☐ Emulsion ■

Rear Shocks

Spring: Yellow 3.1lb
Piston: 1.2
Shock Fluid: 30 wt
Limiter: 0
Rebound: _____
Bladder ☐ Emulsion ■

Electronics

Motor & Wind: _____
Pinion: _____ Spur Gear: _____
Battery Type: Stick ☐ Saddle ■ _____
Battery Placement: Front ☐ Middle ☐ Back ☐
Other ☐ _____

Radio: _____
Throttle / Brake e.p.a: _____
Throttle / Brake expo: _____
Servo: _____ Steering Expo: _____
ESC: _____ ESC Software: _____
ESC Profile: _____---_____---_____---_____

Slipper / Differentials

Standard Slipper ☐ VTS Slipper ■ _____
Front Diff Fluid: 30,000 wt
Rear Diff Fluid: 5,000 wt

Chassis

Chassis Brace: Yes ■ No ☐ _____
Chassis Weight: _____

Front Tires

Tire: _____ Compound: _____
Insert: _____ Wheel: _____
Notes: _____

Rear Tires

Tire: _____ Compound: _____
Insert: _____ Wheel: _____
Notes: _____

Body

Body Type: _____ Notes: _____

Race and Vehicle Comments

Qualify: _____ Main: _____ Finish: _____ TQ: ____
Comments: _____

Track Info

Smooth: ☐ Bumpy: ☐ Blue Groove: ☐
Traction: High: ☐ Medium: ☐ Low: ☐
Soft Dirt: ☐ Grass: ☐ Clay: ☐ Wet: ☐
Dusty: ☐ Other: _____

SC10 4x4 Short Course Setup Sheet

Driver: SC10 4X4 RTR Setup
Date:
Track:
Event:
Conditions:
Rev.3

Front Suspension

Steering Rack
Standard ■
Option ☐

Washers: 0

Bumpsteer Washers: 0

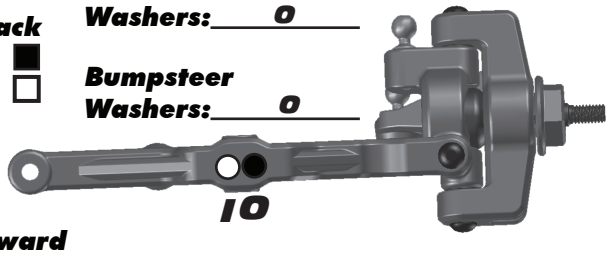

Option Rack

Forward
Back

Steering Stop Gap: _____

Anti Roll Bar:

1.5mm ☐
1.8mm ☐
2.0mm ☐
2.2mm ☐
None ■

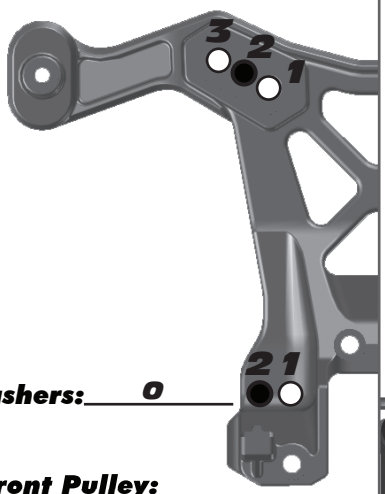

Camber: -1

Toe: 0

Ride Height: 27mm

Washers: 0

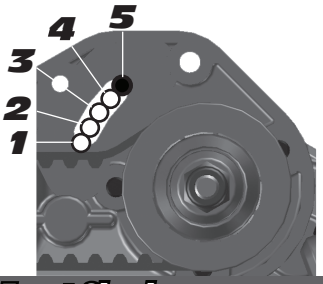

Front Pulley:
20T (standard) ■
19T (overdrive) ☐

Clicker: ☐ _____
Full Time 4X4: ☐

Rear Suspension

Wheelbase:
Long ☐
Medium ■
Short ☐

Anti Roll Bar:

1.5mm ☐
1.8mm ☐
2.0mm ☐
2.2mm ☐
None ■

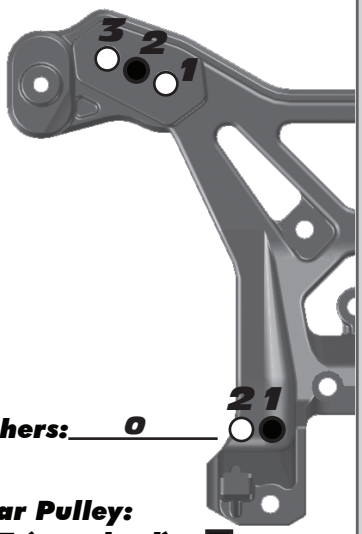

Camber: -1

Ride Height: 27mm

Toe Block: 3-2 ■
3-3 ☐

Washers: 0

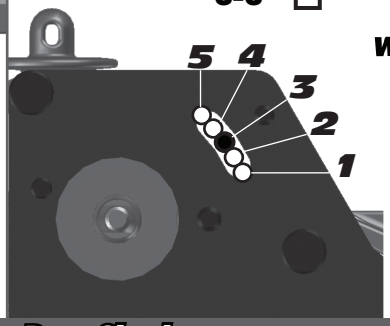

Rear Pulley:
20T (standard) ■
19T (underdrive) ☐

Slipper Coupled ☐
Slipper De-Coupled ■

Front Shocks

Spring: Blue 4.3lb Piston: 1.2
Shock Fluid: 35 wt Limiter: 0
Rebound: 1/2 Bladder ■ Emulsion ☐

Rear Shocks

Spring: Yellow 3.1lb Piston: 1.2
Shock Fluid: 30 wt Limiter: 0
Rebound: 1/2 Bladder ■ Emulsion ☐

Electronics

Motor & Wind: _____
Pinion: _____ Spur Gear: _____
Battery Type: Stick ☐ Saddle ☐ _____
Battery Placement: Front ☐ Middle ■ Back ☐
Other ☐ _____

Radio: _____
Throttle / Brake e.p.a: _____
Throttle / Brake expo: _____
Servo: _____ Steering Expo: _____
ESC: _____ ESC Software: _____
ESC Profile: _____---_____---_____---_____

Slipper / Differentials

Standard Slipper ■ VTS Slipper ☐ _____
Front Diff Fluid: 30,000 wt
Rear Diff Fluid: 5,000 wt

Chassis

Chassis Brace: Yes ☐ No ■ _____
Chassis Weight: _____

Front Tires

Tire: _____ Compound: _____
Insert: _____ Wheel: _____
Notes: _____

Rear Tires

Tire: _____ Compound: _____
Insert: _____ Wheel: _____
Notes: _____

Body

Body Type: _____ Notes: _____

Race and Vehicle Comments

Qualify: _____ Main: _____ Finish: _____ TQ: ____
Comments: _____

Track Info

Smooth: ☐ Bumpy: ☐ Blue Groove: ☐
Traction: High: ☐ Medium: ☐ Low: ☐
Soft Dirt: ☐ Grass: ☐ Clay: ☐ Wet: ☐
Dusty: ☐ Other: _____

:: For more setups, visit RC10.com and click on "Setup Sheets"

:: Hardware - 1:1 Scale View

Cap Head (shcs)

- 2.5x5mm (91159)
- 2.5x8mm (89222)
- 3x6mm (25658)
- 3x8mm (89223)
  3x8mm Aluminum (8561)
- 3x10mm (25620)
- 3x12mm (89454)
- 3x14mm (25190)
  3x14mm Aluminum (8564)
- 3x16mm (89224)
  3x16mm Aluminum (8565)
- 3x18mm (25191)
- 3x20mm (25192)
- 3x24mm (89225)
- 3x26mm (89226)
- 3x28mm (89227)

Nuts (lock/plain)

- M3 Locknut (25215)
  M3 Alum. Locknut, Blue (31550)
- 4-40/5-40 Nylon Locknut (6222)
- M3 Locknut w/Flange (25612)
  FT 3mm Locknuts, Blue(25392)
- M4 Locknut (89216)
- M4 Locknut w/Flange (91148)
  FT M4 Locknuts w/Flange, Blue (31551)

Setscrew

- 3x3mm (25225)
- 3x5mm (89219)
- 3x16mm (4689)
- 4x4mm (7732)

Flat Head (fhcs)

- 2.5x6mm (4675)
- 3x8mm (25201)
  3x8mm Aluminum (8553)
- 3x10mm (25202)
- 3x14mm (89208)
- 3x18mm (89209)
- 3x26mm (89211)

Ballstuds

- HD 6mm (91047)
  Ti Nitride HD 6mm (91118)
- HD 8mm (91048)
  Ti Nitride HD 8mm (91119)
- HD 10mm (91049)
  Ti Nitride HD 10mm (91120)
- HD 12mm (91050)
  Ti Nitride HD 12mm (91121)

Shims and Washers

- 2.5x5mm Washer (91091)
- M3x5.6mm Washer (89528)
- 3x6mm Washer (91091)
- 3x8mm Washer (89218)
- Rear Hub Spacer (91037)
- Axle Shim (91043)
- Thrust Washer (91090)

Button Head (bhcs)

- 2x4mm (31510)
- 3x4mm (91158)
- 3x6mm (31531)
- 4-40x1/4" (6288)
- 3x8mm (31532)
  3x8mm Aluminum (8552)
- 3x12mm (89202)
- 3x14mm (25187)

Ball Bearings

- 3x8x4mm (91002)
- 4x8x3mm (31402)
- 5x10x3mm (91156)
- 6x12x4mm (25238)
- 10x16x4mm (91157)
- 12x18x4mm (91155)

SC10 4x4 Short Course Setup Sheet

Driver: _____ Date: _____
Track: _____ Event: _____
Conditions: _____ Rev.3

Front Suspension

Steering Rack
Standard ☐
Option ☐

Washers: _____

Bumpsteer Washers: _____

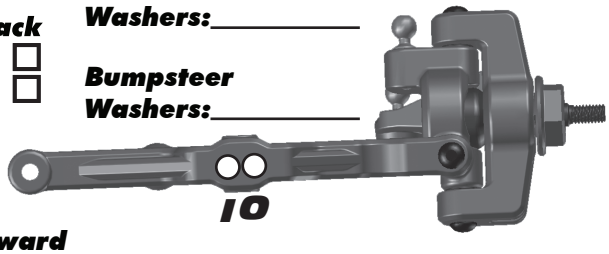

Option Rack

Forward
Back

Steering Stop Gap: _____

Anti Roll Bar:

1.5mm ☐
1.8mm ☐
2.0mm ☐
2.2mm ☐
None ☐

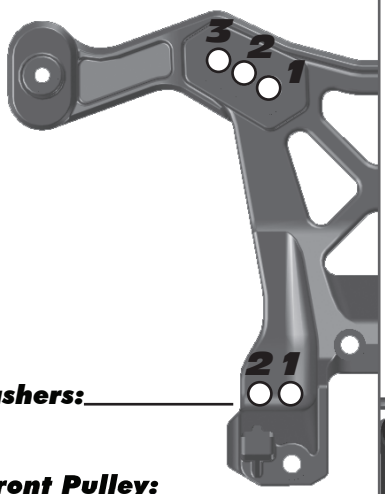

Camber: _____

Toe: _____

Ride Height: _____

Washers: _____

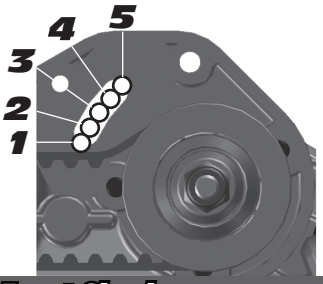

Front Pulley:
20T (standard) ☐
19T (overdrive) ☐

Clicker: ☐ _____
Full Time 4X4: ☐

Rear Suspension

Wheelbase:
Long ☐
Medium ☐
Short ☐

Anti Roll Bar:

1.5mm ☐
1.8mm ☐
2.0mm ☐
2.2mm ☐
None ☐

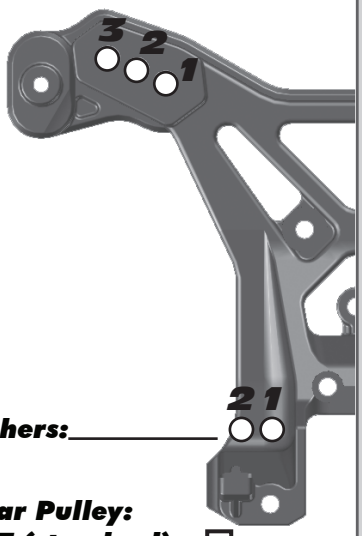

Camber: _____

Ride Height: _____

Toe Block: 3-2 ☐
3-3 ☐

Washers: _____

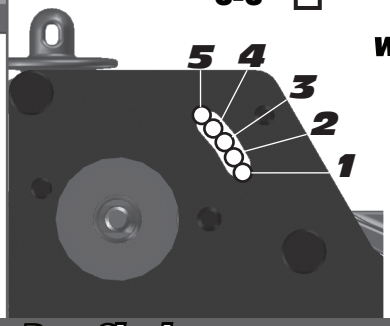

Rear Pulley:
20T (standard) ☐
19T (underdrive) ☐

Slipper Coupled ☐
Slipper De-Coupled ☐

Front Shocks

Spring: _____ Piston: _____
Shock Fluid: _____ Limiter: _____
Rebound: _____ Bladder ☐ Emulsion ☐

Rear Shocks

Spring: _____ Piston: _____
Shock Fluid: _____ Limiter: _____
Rebound: _____ Bladder ☐ Emulsion ☐

Electronics

Motor & Wind: _____
Pinion: _____ Spur Gear: _____
Battery Type: Stick ☐ Saddle ☐ _____
Battery Placement: Front ☐ Middle ☐ Back ☐
Other ☐ _____

Radio: _____
Throttle / Brake e.p.a: _____
Throttle / Brake expo: _____
Servo: _____ Steering Expo: _____
ESC: _____ ESC Software: _____
ESC Profile: _____---_____---_____---_____

Slipper / Differentials

Standard Slipper ☐ VTS Slipper ☐ _____
Front Diff Fluid: _____
Rear Diff Fluid: _____

Chassis

Chassis Brace: Yes ☐ No ☐ _____
Chassis Weight: _____

Front Tires

Tire: _____ Compound: _____
Insert: _____ Wheel: _____
Notes: _____

Rear Tires

Tire: _____ Compound: _____
Insert: _____ Wheel: _____
Notes: _____

Body

Body Type: _____ Notes: _____

Race and Vehicle Comments

Qualify: _____ Main: _____ Finish: _____ TQ: ____
Comments: _____

Track Info

Smooth: ☐ Bumpy: ☐ Blue Groove: ☐
Traction: High: ☐ Medium: ☐ Low: ☐
Soft Dirt: ☐ Grass: ☐ Clay: ☐ Wet: ☐
Dusty: ☐ Other: _____

:: For more setups, visit RC10.com and click on "Setup Sheets"

Associated Electrics, Inc.
26021 Commercentre Dr.
Lake Forest, CA 92630 USA
http://www.TeamAssociated.com
http://www.RC10.com
http://twitter/Team_Associated
http://bit.ly/AEonFacebook

call: (949) 544-7500 - fax: (949) 544-7501

Check out the following web sites for all of our kits,
current products, new releases, setup help, tips, and racing info!
www.TeamAssociated.com. - www.RC10.com